VOLUME 2 NO.1

Published By
THE POOR MAN'S ARMORER
P.O. BOX 586, EUREKA, CAL. 95501

©Copyright 1979

The Only Magazine Of Improvised Weaponry

Compiled and Edited By
Bonnie&Clyde Barrow

Introducing the PMA

The Poor Man's Armorer is oriented to responsible adults who wish to make,modify,and use all types of weapons. Conventional hunting/survival tools and exotic special purpose weapons will be covered.All procedures described will be as practical and inexpensive as possible.

Volume Two of PMA will continue to feature weapons articles similar to those that appeared in Volume One. The major difference in projects for this volume will be the assumption that the reader has access to welding equipment and facilities for melting aluminum.A standard oxy-acetylene torch will be sufficient for both of the above.

Also required will be some type of lathe setup,preferably a metal cutting lathe,although a hobby type wood lathe can be used. A metal cutting lathe is indispensable in the home workshop. John Matlock has a number of excellent models available for as little as $75, so there is no reason for not having one of your own.(see Popular Machining Magazine review in this issue.) CONTINUED ON PAGE 40

Editorial Statement of Policy

We at the Poor Man's Armorer Magazine research, write, buy and sell information only. We do not buy, sell or manufacture weapons. All info in PMA is legal to possess, print, sell and send through the US mails.

Foreign orders are welcome but we are not responsible for and will not refund money on issues seized by foreign customs agents.

Several readers have requested that we include legal comments with weapons articles. Any weapon you can name is illegal somewhere in this country. As responsible journalists, we would never suggest,infer, or recommend that you break the law. All weapons in the PMA can be legally built and owned. Many of them do require special federal, state or local licenses/permits. This publication is read in several countries and by every type of individual from anti-gun watchdogs to professional machine gun manufacturers and dealers. It's pointless for us to belabor every possible legal aspect of every weapon covered.

If you plan to build weapons,you should obtain copies of federal,state,and local weapons laws from the appropriate agencies,the local library or your attorney.

It is the sole responsibility of the reader to determine legality before building.

The following should go without saying, but here it is once for the record:

Improvised weaponry is a dangerous business. Please wear safety glasses and hearing protection when building or testing any improvised design.Use double safeguards to offset unforeseen disasters. You are responsible for anyone and anything you may damage.

The Poor Man's Armorer Magazine and all contributors will not be responsible for any injuries or property damage that may result from the use of information or ideas found in PMA.

All data is obtained from sources believed to be correct. The accuracy of any and all of the material in PMA cannot be guaranteed.

Article Submissions

Readers are encouraged to submit articles, designs, and related material. Please submit only material which is yours to sell. Material is subject to our editing. We pay five cents (5¢) per word used, with payment upon publication. If you have something really unique that you wish to sell for more than our standard rate, contact us and we'll discuss it. Submitted articles should be typed and double spaced.

PMA will gladly pay contributors $5-10 for drawings we're able to use with their articles, as long as we don't have to redraw them. Black ink or fine line black felt pen are fine, but ballpoint and colored felt pens all have to be reinked. If you will label drawings in light pencil, we can type up labels, no problem. Drawings hand labeled in ink have to be retouched before we can retitle them and this takes alot of time.

We also will pay $10 for each photo we use with the article. Photos must be black and white only. Submit matte finish prints only. No glossies, please.

Unused articles, photos, and drawings cannot be returned unless they are accompanied by a prepaid mailer.

Subscription Rates

Poor Man's Armorer Magazine-Volume 2
4 issues-1 year

Bulk Rate subscription US	$20.00
1st Class subscription US	$23.00
Canada-1st Class Only	$23.00
Foreign-Air Only	$25.00
PMA Vol.1 Bound Edition	$14.95
PMA Vol.1-all Foreign	$20.00

Foreign subscriptions should be remitted by International Money Order in U.S. funds. Please allow us four weeks prior notice when changing address. Send old and new addresses when notifying us. Note: Bulk rate 3rd class mail is not forwarded to new addresses, it is thrown out by the post office.

Advertising Rates

Classified Ads:
$1.00 per word, $10.00 minimum. Weapons oriented ads only. No employment ads from Mercs, Foreign govts., or their agents will be accepted. No other restrictions on copy.

Display Ads:
Print page size-7¼ in.x 9-3/4 in.
Column width-3½ in.
Column length-9 3/4 in.
Black and White only, no color.
Please submit copy camera ready, B & W
No ads larger than ½ page will be accepted.
The following display rates and sizes will apply to Volume 2 PMA.

col. length		col. width	1-time	same ad 3-times
1	inch x	3½ inches	$ 25	$ 20
2	inches x	3½ inches	50	75
3	inches x	3½ inches	75	65
4	inches x	3½ inches	100	85
¼ page display ads:				
5	inches x	3½ inches	120	100
2½	inches x	7¼ inches	120	100
½ page display ads:				
5	inches x	7¼ inches	200	150
9¾	inches x	3½ inches	200	150

Please include a sample of products to be advertised with your ad copy. This is an inconvenience for you, but because of the rash of survival and "mercenary" garbage currently on the market, we can accept ads only for those products which we can personally endorse to our readers. We feel they deserve the best. Product samples will be returned if you wish. Please include sufficient funds for return shipment via UPS. All samples sent for review which require an FFL# before shipping will be received by our local gun dealer. Please contact us first for shipping instructions. (NO Class Three weapons, please.)

The PMA is your newspaper. We wish to publish articles and information that you have not been able to find in other publications. Sources for raw materials are a big problem so each issue will contain a list of hard-to-find parts, chemicals, etc. If you cannot find a particular item, drop us a postcard and we'll try to include a source for you in the following issue.

We appreciate the letters and comments submitted by readers but we are unable to answer individual letters. Questions of general interest will be answered in articles or the letter column.

Letters to the Editor

Mr. Barrow,

Enclosed for your information is a flyer from Charter Arms concerning the scope mount that they have available for the AR7. I have ordered one for my rifle and will see how it works out. I am curious to see how it fits into the stock, or if it will. Price is $10.00.

The price of a barrel assembly is now $18.50 and includes front sight, barrel nut and lock washer. Order part #2316 from Charter Arms for this unit.

I would like to see an article on full auto conversion for this rifle if that is possible. Regards, A Reader

Ed Note: Thanks, interesting design! I havn't had a chance to test one yet.Readers interested in further info should write:

Charter Arms Corp.
430 Sniffins Lane
Statford, CT 06497

Dear Clyde,

In reference to the article on "How to Convert a File Into a Hunting Knife" on page 61 of Vol. I.

As a practicing blacksmith, I shudder to think of what a piece of junk will be turned out by following those directions. If a file (high carbon content steel) is brought to a white heat, the carbon will have started to burn and render the steel useless. I could go on, but if I may, I will list the proper directions for knife-making from a file.

1. Break the file off to proper length 1st while it is brittle.
2. Heat the file to an orange-yellow color and let cool slowly.
3. The proper way to shape the blade is by forging, but now is the time for grinding the shape. Grind following the instructions in the drawing.
4. Reheat knife to a bright cherry red color, let cool to an even dull red and quench (edge first) in used motor oil. This makes the blade hard but brittle.
5. Heat a block of iron to a bright cherry red and polish one side of knife blade with sandpaper.
6. Hold back of knife blade against the hot block and watch for the rainbow of temper colors on the polished part of the blade. When the cutting edge reaches a bronze color, hold a wet rag on the edge until the back of the knife reaches a blue color, then quench entire blade (edge first) in water.
7. Sharpen

Smokey Adams
Colo

Dear Clyde,

When you printed my article "Flashbulbs as Detonators", a minor error was made on the drawing for the test. Apparently, you rearranged the match on my drawing, and in doing so, added an extra wire.

Figure 1 is wrong, and the test will not work. The correct illustration should be like Figure 2. Thanks, Fred Bilello

Ed. Reply - Oops!

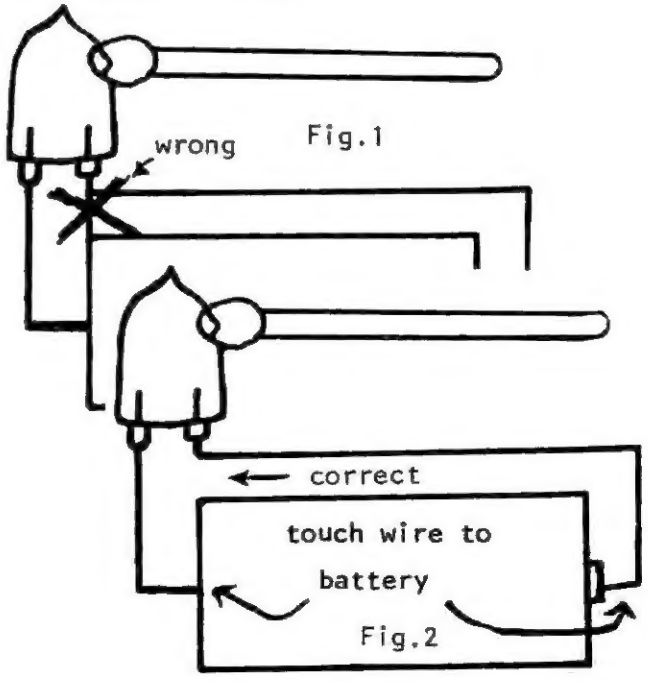

Letters to the Editor

Dear Clyde,

Received issues 7-12 and enjoyed them. Am looking forward to Vol.II.

When are you going to show us how to make the long silenced barrel for the AR-7, and make the thing full auto?

Your guided missile looks very capable, indeed. What type of 'D' engines did you use? Booster, upper stage, or what? This info was left out.

You need an electric blasting cap for the explosive, and these are not the easiest things to get hold of. An article on their manufacture would be good.

(Anyone out there know how to improvise blasting caps? ED)

Here's a modification for your chlorine gas generator. Put hydrochloric acid in the bleach bottle, and some cyanide in the pan instead of sani-flush. Slick, huh? Instant San Quentin all over the place. Better hold your nose when you punch your hole in the bleach bottle, or do it remotely somehow.

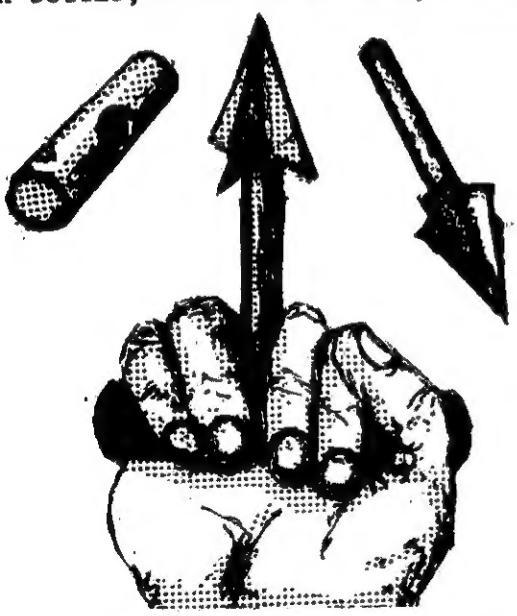

Here's an idea for a nifty little push dagger: Get a broadhead hunting arrow and cut off the point and about 5 inches of shaft. Get a wooden or metal rod and drill a hole in the side of it so the arrow shaft fits in rather loosely. The shaft should be metal. Hold it so the arrow portion sticks out between the fingers of your fist, and punch. The arrow will stay inside the victim, and the handle part will still be in your hand to be used like a yawara stick if needed. Of course you can smear cyanide all over the broadhead point, and this will insure getting the job done right. Watch out how you carry this thing so you don't stick yourself! Perhaps some kind of sheath can be made.

As far as bullet, arrow, and dart poisons are concerned, why not use the venom from various snakes and spiders? There are too many of these icky creatures around any way, so you may as well use what they've got to offer. How you get the stuff out of them is another story, but at least it's a thought. E.L.

Dear E.L.,

Maybe you could get a good recipe for extracting cobra venom or shell fish toxin through the Freedom of Information Act.

There are so many other variables in the missile design that any of the D series motors would probably be fine. Pick one and stick with it during all tests for consistant results.

Buy the broadhead arrows that accept snap-in cross blades. Cuts a nice X shaped hole that tends to stay open. Pulling out the arrow head usually causes the insert to snap off inside the body. See AR-7 article elsewhere in this issue. Clyde

Dear Clyde,

I just received Vol.1 #6 of PMA. I felt I must let you know of a very dangerous condition in regard to modification of the disconnector on the .45 auto Colt, as described on page #84 of that issue.

I know this following condition does exist on the .45 ACP, and would naturally suspect it would also exist on other semi-auto pistols if you were to try to modify them to full auto.

I worked on many .45 auto pistols as an ordnance petty officer in the navy. 1st off, the slide operates the disconnector & the sear together. If the disconnector does not engage/disengage the sear upon pulling the trigger you will have a 'run away gun'. In other words, once you pull the trigger, even when released, the gun will continue to fire until the ammo supply is exhausted (imagine a long 40 round mag.). Of course, any other dangerous malfunction could wipe you out or anybody near by. In the service, after replacing either or both sear & disconnector, only two (2) rounds would be loaded in the mag. so if "run away" were to happen, it would let us know of the condition but only for a safe two (2) rounds. I would discourage any body trying this only for safety reasons! Best, Big Bird

Letters to the Editor

Dear Clyde,

Wow!! This is just what I have been looking for in a do-it-yourself publication.

I have always been interested in firearms, conversions, and such, both legal and illegal. Since receiving the 5 issues this week a lot of questions have been answered that have bugged me thru the years.

Very truly, D.V.
Mich

Dear Clyde,

I am interested in getting information on making a fully automatic shotgun. The only one I have ever seen was in the book Improvised Modified Firearms Vol.1 by John Minnery. If you have any idea where I might be able to get information on making a shotgun fully automatic, I would appreciate it very much if you would let me know.

Thank you very much. A.W.

ED: Does anyone know of a source for this material? It would make an interesting article.

Dear Mr. Barrow,

I'm very glad that I bought Volume I of PMA. Your publication fills an important gap in the firearms area. Too many gun magazines have $1000 "fantasy guns" or are afraid of offending the gun manufacturers (who advertise heavily in them) so they don't tell the readers the serious drawbacks of many weapons. Knowing what to avoid can save you much money. (In Vol.1#4, page 62, I thought Mr. Chnical's article on the .223 Bushmaster very well written & helpful.)

I appreciate your printing of the leters to the editor. Your readers often have excellent ideas or know where to secure parts. Do you or they know where to get:

1. Extended clips for Ruger .22 auto pistol.
2. Are there any .22 magnum clip-magazine rifles, semi-auto made in the US.
3. What readers think of the 25 shot clips for the 10/22's.
4. Their experiences with the Marlin 99 M1 (clip version), and where to buy extended clips for it.

Although I was very impressed by Martin Kruse's article (pg.122, Vol1) on ringed shotgun slugs, I felt a bit apprehensive when I thought of all the cardboard-crimping-lead and everything trying to rush through a full choke. Will it compress adequately and keep flying forward, or will it 'stick' in there, bunch up and blow the barrel apart? What about steel shot, that doesn't give very much, so I'd wonder about damaging the gun. If the idea is safe and would work in my Remington 870, I'll easily save several years in PMA subscription costs in not having to buy expensive rifled slugs. The narrow muzzle constriction and the wideness of the 12 gauge shell going through it, by all logic should tear it apart or explode it. Thank you for your fine publication and for considering this letter.

Cincinnatus

Dear Clyde,

Just a few ideas of mine: One of the easiest ways to carry a .25 ACP or .22 auto is to make a camouflaged holder. I started with a 100 mm cigarette pack. First I opened the pack from the bottom, being careful not to rip or tear the cellophane. After removing the cigarettes and foil, I made a cardboard box the same size as the inside of the pack. After gluing the box in, I cut one side out far enough for the handgun to fit. I carry my Colt .25 Jr. in my shirt pocket, upside down, ready for action, even in places where a handgun is frowned on.

A large pen can be used to hide a knife. I took a large size felt point pen, gutted it, then made a blade from a three cornered file. Then I set the blade in the cap. You can have a three inch blade with you at all times. Use epoxy to set the blade if the cap is metal, use a glue that's safe on plastic for non metal caps.

To deliver non-caustic chemicals, try an ordinary balloon. A balloon full of ordinary alcohol will make a nice hemisphere of fire when it pops. For semi-caustic liquids perhaps a rubber glove might work, being stronger.

A three-cornered file, with a handle makes a fairly good stabbing weapon, especially if you choose one that almost has a point on it. The teeth don't slow it down much when in use.

A large knitting needle lends itself to stabbing quite well, if you buy a steel one instead of plastic or aluminum.

Would you be interested in a pet project of mine? It is a .22 rifle of bull pup design, which shortens it to a manageable length if a silencer is installed. More to come.

J.J.
Kentucky

Dear JJ,

Yes, I'd like to see the plans for your bullpup. *Clyde*

Continued on page 30

CONVERSION CHART
INCHES/MM

Meters .....X 3.2809 = Feet Millimeters .....X .03937 = Inches
Meters .....= .3048 X Feet Millimeters .....= 25.400 X Inches

Inch Fraction	Decimal Equiv.	mm Equiv.	Inch Fraction	Decimal Equiv.	mm Equiv.	Inch Fraction	Decimal Equiv.	mm Equiv.
1/64	.0156	.397	23/64	.3594	9.128	11/16	.6875	17.462
1/32	.0312	.794	3/8	.375	9.525	45/64	.7031	17.859
3/64	.0469	1.191	25/64	.3906	9.922	23/32	.7187	18.256
1/16	.0625	1.587	13/32	.4062	10.319	47/64	.7344	18.653
5/64	.0781	1.984	27/64	.4219	10.716	3/4	.75	19.050
3/32	.0937	2.381	7/16	.4375	11.112	49/64	.7656	19.447
7/64	.1094	2.778	29/64	.4531	11.509	25/32	.7812	19.844
1/8	.125	3.175	15/32	.4687	11.906	51/64	.7969	20.241
9/64	.1406	3.572	31/64	.4844	12.303	13/16	.8125	20.637
5/32	.1562	3.969	1/2	.5	12.700	53/64	.8281	21.034
11/64	.1719	4.366	33/64	.5156	13.097	27/32	.8437	21.431
3/16	.1875	4.762	17/32	.5312	13.494	55/64	.8594	21.828
13/64	.2031	5.159	35/64	.5469	13.891	7/8	.875	22.225
7/32	.2187	5.556	9/16	.5625	14.288	57/64	.8906	22.622
15/64	.2344	5.953	37/64	.5781	14.684	29/32	.9062	23.019
1/4	.25	6.350	19/32	.5937	15.081	59/64	.9219	23.416
17/64	.2656	6.747	39/64	.6094	15.478	15/16	.9375	23.812
9/32	.2812	7.144	5/8	.625	15.875	61/64	.9531	24.209
19/64	.2969	7.540	41/64	.6406	16.272	31/32	.9687	24.606
5/16	.3125	7.937	21/32	.6562	16.669	63/64	.9844	25.003
21/64	.3281	8.334	43/64	.6719	17.065	1	1.	25.400
11/32	.3437	8.731						

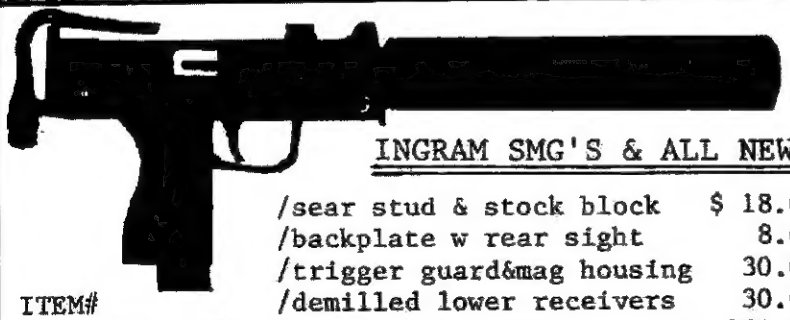

M10/M11 parts — Anyone can buy!

Special Parts Ltd.

INGRAM SMG'S & ALL NEW SEMI-AUTO PISTOLS & CARBINES

ITEM#		
	/sear stud & stock block	$ 18.00
	/backplate w rear sight	8.00
	/trigger guard&mag housing	30.00
	/demilled lower receivers	30.00
1.	Ingram M10 .45 SMG Parts Pack	* 160.00
2.	Ingram M10 9MM SMG Parts Pack	* 180.00
3.	Ingram M11 .380 SMG Parts Pack	* 195.00
5.	M11 .380 Silencer Parts Pack	** 135.00
6.	M10 9MM or #7. M10 .45 Silencer Packs	** 110.00
10.	Alternate Stock (flat butt) M10	25.00
11.	Barrel Extensions (threaded)	36.00
14.	Upper Receiver w/carbine barrel (M10)	168.00
17.	Sear Pin (semi-automatic only)	10.00
35.	½ M10 9MM Silencer-great paperweight	70.00

TERMS: UPS shipments require street address.U.S. Postal Money Orders get shipped within 3 days; checks take 3 weeks to clear before shipping.

* EACH SMG PARTS PACK CONTAINS: manual,used mag.,assembled bolt, stock & upper receiver assemblies,trigger guard,mag.housing, sear stud & stock block.

**ALL SILENCER PACKS CONTAIN: manual, new wipe assembly, spirals & baffles.
YOU GET EVERYTHING EXCEPT THE LOWER RECEIVER & THE 2 SILENCER TUBES.

Special Parts Ltd.
PO Box 7652 pma
Atlanta,GA.30357

SEND A STAMPED, SELF-ADDRESSED ENVELOPE FOR FREE PRICE LIST.

The Commando Carbine

By John Minnery

"There comes out of the sea from time to time a Hand of Steel which plucks the German sentries from their posts"-
Winston Churchill
1942

Myth and conjecture have made the De Lisle System one of the least understood weapons of the clandestine forces of WWII.

The reader can quickly understand why the Commandos found it necessary to have a weapon that would kill a man, silently, out to a distance of a hundred meters. The criterion for such a weapon was that it be as efficient as possible,accurate,lethal,silent and compact. It was of paramount importance that enemy guards be eliminated in those situations where they could not be approached with the knife.

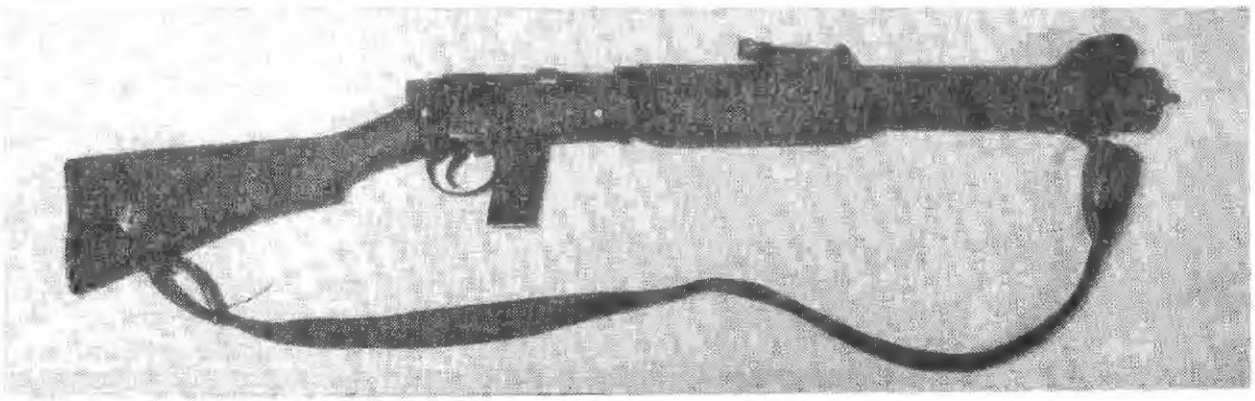

The De Lisle Carbine. All photos courtesy of the author

Mr. W.G. De Lisle of Poole, Dorset and the scion of a famous British breakfast cereal company, conceived of a firearm that brilliantly fulfilled these needs. It was evident to De Lisle that the weapon would have to be a carbine and that the only cartridge that did not require special loadings and modifications was the .45ACP which was used in the Colt Auto and Thompson SMG, both "issue" items of the British Commandos of the time.

A prototype of the weapon was produced in a few short weeks. It was a cleverly simple design and had all the earmarks of the "Why didn't I think of that?" Syndrome.

The standard .303 Lee-Enfield was cut at the junction of the barrel and the receiver and then bored out to accept a turned down Thompson barrel that was forced into the receiver, which in turn meant the bolt had to be shortened approx. .50mm. The Thompson barrel's breech was reamed to seat the cartridge more fully and a cutout was made in the chamber to permit entry to the Enfield's extractor. The firing pin,although shortened to suit the dimensions of the shortened bolt, remained unchanged as did the bolt face,and as luck would have it, the extractor fitted the .45's cannelure without modification. The charger bridge was removed and the box mag was replaced with a housing that would accept a .45 pistol mag. The mag itself had a lug brazed on to enable it to be held by the Enfield's mag catch. This queer weapon functioned perfectly and loaded the Colt ammo without difficulty.

The basis for this design might be found in Hatcher's Textbook of Firearms Investigation and Evidence (1935 Ed) page 71 - a photo of which shows a .45 barrel fitted to the receiver of a Springfield rifle. As for the silencer,I was told that the design came from the examination of a farm tractor's muffler. His improvements were noteworthy and a patent was filed on them after the War (1947).

The silencer had an expansion chamber and ingeniously simple spiral diffuser system. The 13 baffles were mounted and spaced for effect on two threaded rods that ran parallel to the barrel and made for perfect alignment with the bore and a rigid support for the baffles. The silencer casing is perhaps the largest in volume of any silenced weapon of this type and made it the best possible weapon made for special combat use.

The weapon's detractors point to the working clatter of the bolt as a drawback to its silent role. I can only point out that plastic inserts were used on the later models where these metal surfaces met.

The sights were the issue-Enfield type but the ranging marks of the .303 were buffed away and the combat distances that corresponded to the trajectory of the Colt bullet were substituted. Some models used the simple 100-200 yd. flip sight of the Lanchester SMG MK1*.

The Special Operations, Executive, had been credited with the development of the weapon, but Maj. Gen. Sir Colin Gubbins had written to tell me that the weapon was fostered by the Army. (Maj.Gen.Gubbins was head of the S.O.,E.)

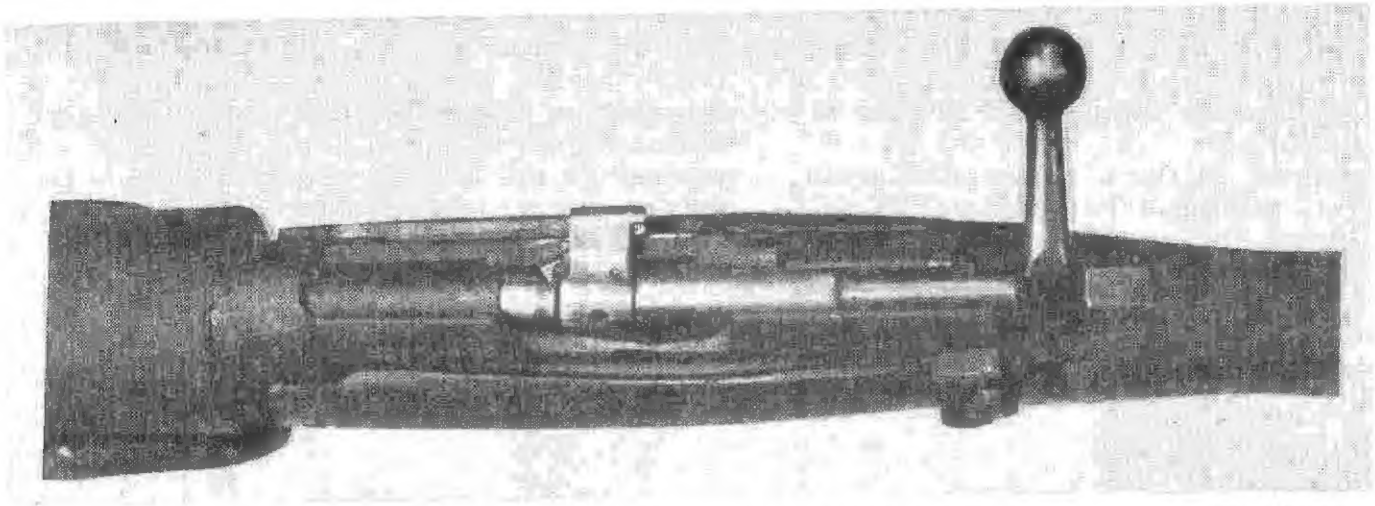

Carbine during extraction - note barrel setback/silencer housing attachment

The weapon was given to individuals in the Commando and Airborne (Airlanding) Forces and every one that I have examined has had some variation from the others.Different sights,lengths,forestocks,false muzzles, extension mags and folding rear stocks were just some of the variants encountered. The weapons were to this extent tailored to fit individual requirements of the group that would be using them.

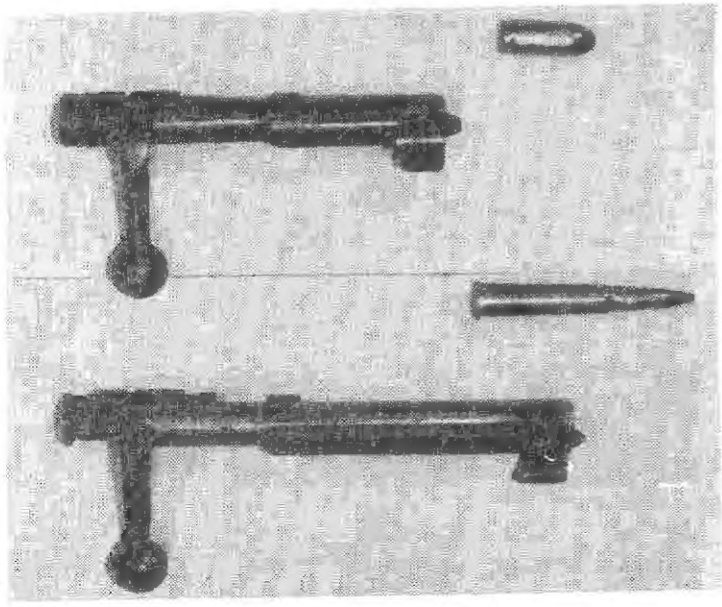

Standard and Shortened Bolts

Another report was that S.O.,E. personnel in training were testing this weapon and the shooter complained that his carbine was mis-firing until it was pointed out to him that there was a .45 cal. hole in the target.

I have tested the weapon extensively and as is my habit I always test any silenced weapon indoors so as to get the maximum reverberations and to magnify the sound-emitting propensities existing in the design so as to better judge its effectiveness in overcoming this problem; I can report that the De Lisle passed this subjective test with flying colors. Because of its heft it is a very stable shooting platform for the .45 and recoil is not a consideration. The Thompson barrel's length makes the weapon very accurate at long range, although the claims to between-the-eyes accuracy out to 400 m. could not be attested to by me and should be considered apocryphal. It is not a sniping weapon per se and 100 m. is its designed-for-killing range.

The best description of the sound when firing that I can convey to the reader would be the sound of a book dropping from your desk to the floor--a flat,hollow thud. Audible but not overly noticeable. There is no flash emitted from this weapon when firing.

The carbine has that intangible quality found in only a few weapons -- it inspires confidence and has that "feel" that it can get the job done and won't let you down. (If I might be permitted to extemporize at this point: given the trusted Enfield, the stopping power of the .45, and a smidgen of the almost sexual elan of the Thompson all rolled together and united with the combat-pleasing anonymity of the silencer and you come very close to the perfect special mission weapon.)

Maintenence of the silencer components is minimal. It cannot be 'shotout' as is the case with other designs. The silencer is easily dismantled and swabbing with a gasoline-soaked rag cleans up any residues.

The folding stock version uses the stock from the Patchett SMG. Its sling swivels are side-mounted and the silencer casing flattened along one side to form a more body hugging configuration.

(NOTE: The M-1 Carbine was equipped with a silencer and was a contemporary of the De Lisle. It was in 9mm and became a repeater as the semi-auto function was pre-empted by the silencer. This weapon was developed at the S.O.,E. Research Station in Welwyn, Herts., and several were given to the OSS for their consideration.)

Technical File:

Calibre: .45 ACP
Function: Bolt action repeater
Mag. Cap.: 7 rounds (Colt mag.)
Cartridge: .45 ACP 1911 (issue)

Major Variants:

i / Mk 1 (Prototype-Original)
Overall Length: 960 mm
Barrel Length: 266 mm
Silencer Length: 440 mm
False Muzzle Length: 25 mm
Silencer Diameter: 50 mm
Silencer Volume: 864 cc
Sight Radius: 300 mm
Length of Silencer Stock: 330 mm
Distinctive Features: Two setting rear sight (Lancester), MK1* Short mag.shroud.

ii / Mk 2 (Stand. Issue)
Overall Length: 887 mm
Length of Silencer: 393 mm
Diameter of Silencer: 50 mm
Silencer Volume: 770 cc
Sight Radius: 320 mm
Length of Silencer Stock: 195 mm
Distinctive Features: Sliding tangent rear sight Mk 1 Lancester type, no false muzzle.
Weight: 3.75 kg (has Duralumin silencer casing)

/ Mk 2 (Folding Version)
Overall Length (folded): 635 mm
Weight: 3.25 kg (Duralumin silencer casing)
Distinctive Features: Pistol grip rear stock and extension mag.

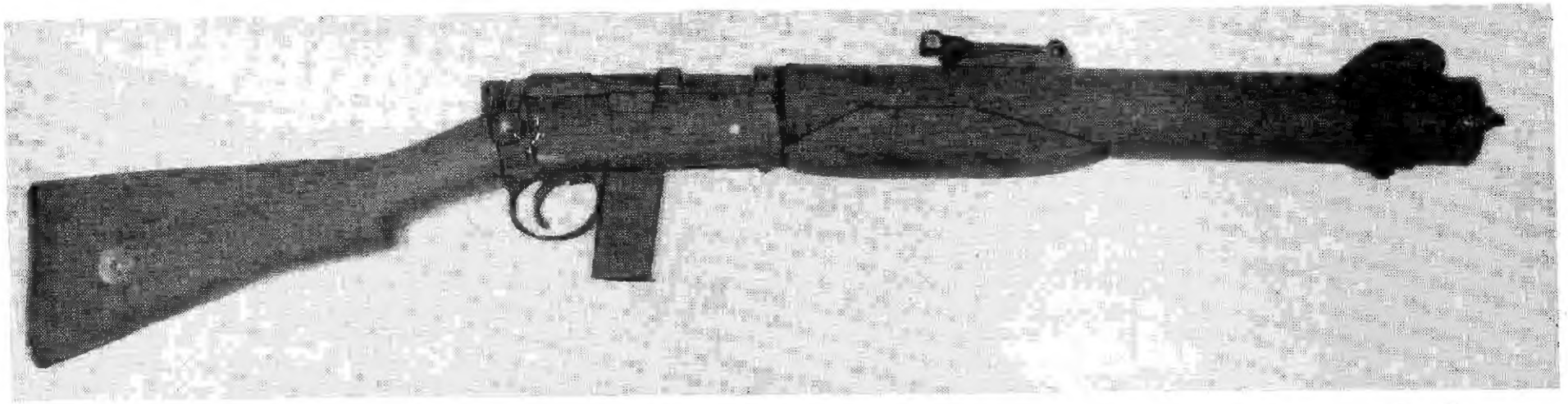

De Lisle Silencer
Principle

End View

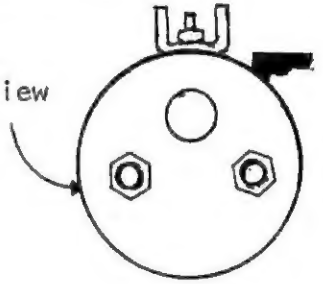

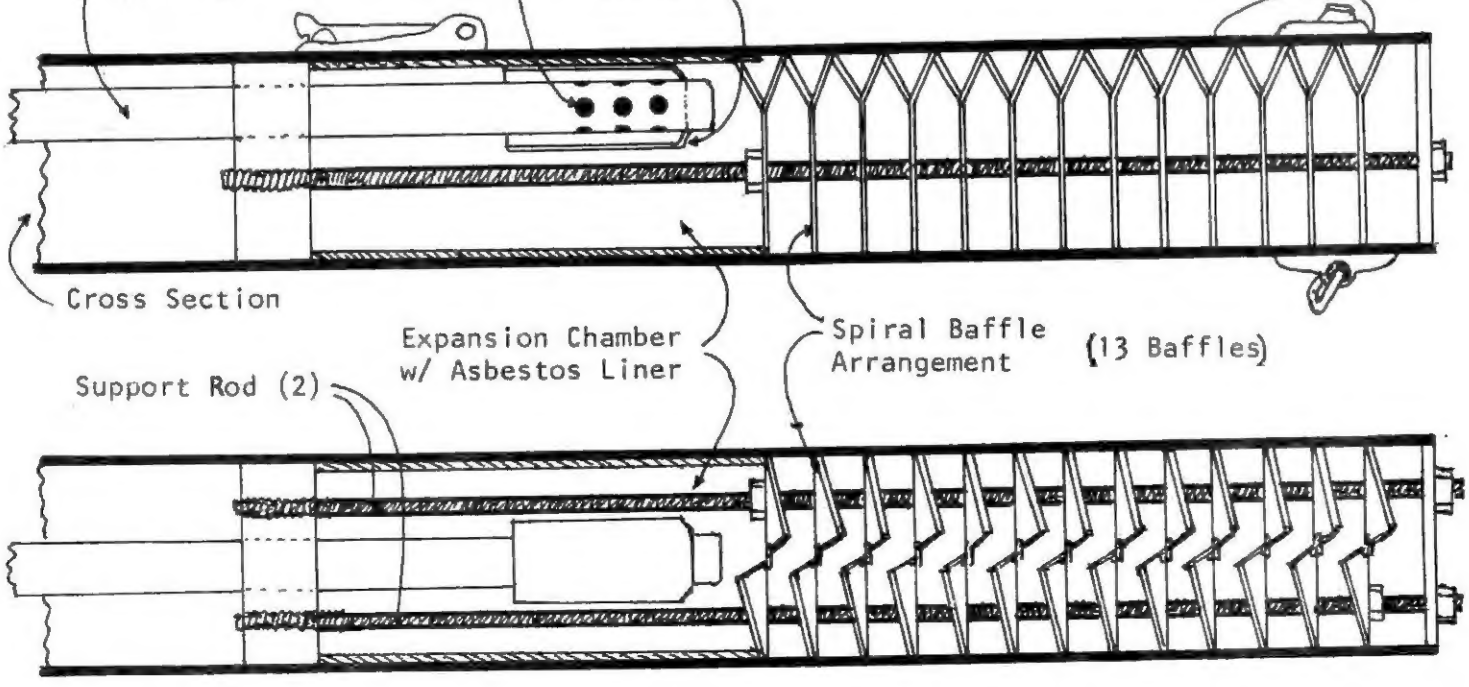

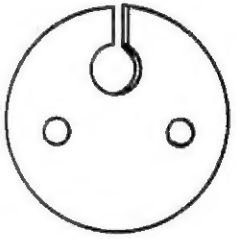

Split &
Bent Baffle

PMA 11

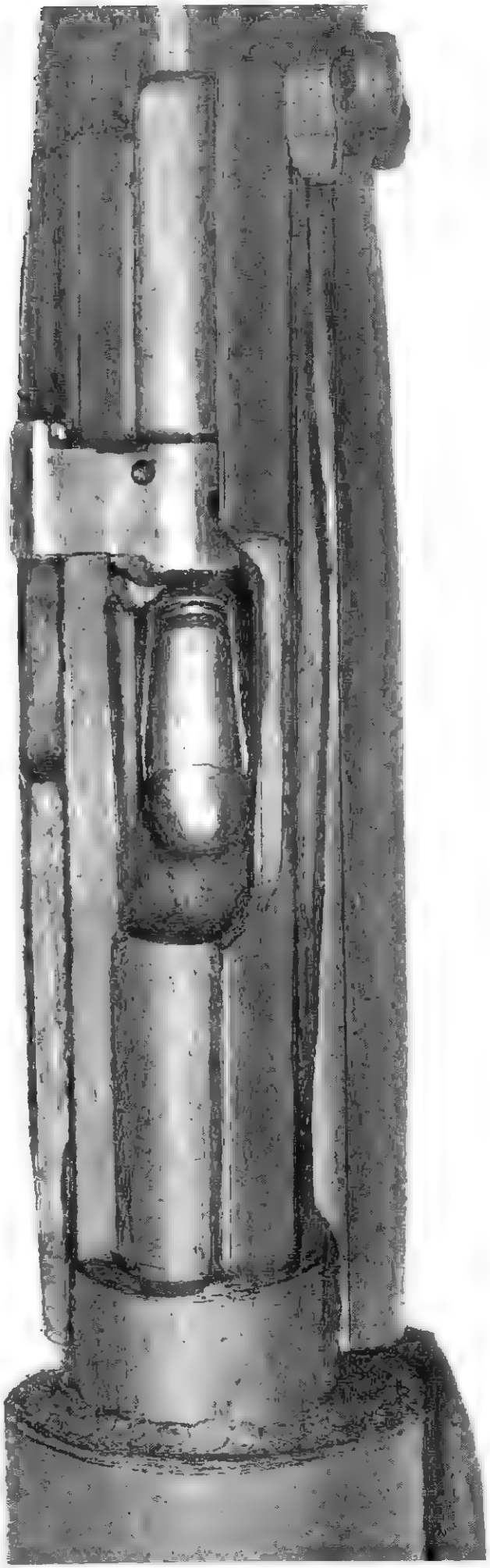

CATALOG REVIEWS

by Clyde Barrow

The following catalogs contain those unique types of items that never seem to be in stock at the local hardware store. Please write to each for their current catalog price and further info. These catalogs are valuable reference sources even if you never order a thing.

B-Square Company-"Tools and Accessories for Gunsmiths & Shooters"
P.O.Box 11282, Ft.Worth, TX 76109
Include a signed FFL for dealer discount sheet.

B-Square's line of special gunsmith tools includes scope mounting jigs, barrel straighteners, swagers, special wrenches, sight drilling jigs, spanner wrenches, choke installing tools, arbor presses, etc. It wouldn't be too hard for you to copy these designs from the large clear photos provided in the catalog. One item of particular interest is a line of taps and dies. These range from sizes for tiny gun screws to units large enough to cut 1½" threads. Try to find anything bigger than 7/8" at the local hardware!

Brookstone-"Hard to Find Tools & Other Fine Things"
127 Vose Farm Rd, Peterborough, New Hampshire, 03458.

Brookstone has tool designs from the nineteenth and early twentieth century that no one else seems to carry anymore. Tools for working with the latest space age materials and just about everything in between. If you need a special hand tool, they have it. Warning! Everytime you look through the Brookstone catalog you'll see another tool that you "have to get". Great to leave laying around the house at Christmas time!

Wag-Aero Inc.-"World's Largest Inventory of Aviation Parts and Accessories"
Box 181, Lyons, Wisc. 53148

These folks cater to the people who build, fly and service private planes. Items like $8 propeller spinners (for missile nosecones) and chrome moly tubing ¼ to 1½" OD. Tools for cutting, rolling, bending, and riveting sheet metal. You'll find struts and fittings for building gunmounts and rocket launchers, navigation gear, complete plane engines, hinges, cables, and much more.

Now let's see, if I take a cessna engine, mount it in a .....

South Bend Replicas, Inc.-"A Catalog of Antique/Replica Ordnance"
61650 Oak Rd, South Bend, IN 46614

This fine catalog is a MUST if you are interested in black powder cannons and mortars. South Bend Replicas sells nothing but cannons from little ones for guarding the fireplace to the big guys that weigh in at over 1,000 lbs. All models can be ordered bored to ½ depth for inert display pieces, (these are no fun), or fully bored, finished and ready to fire. Cannons are produced in both cast iron and brass versions. All shootable models are cast solid, bored by drilling and sleeved with seamless ordnance steel liners. These are the best you can buy, and are certainly a hell of a lot safer and more accurate than their 19th century counterparts. Over half of the catalog is filled with photos, tips and general info valuable to cannon folks and of interest to anyone who likes guns, military history, foundry or carriage work etc. Write for price and other info.

Navy Arms Company - 689 Bergen Blvd., Ridgefield, NJ 07657.

Manufacturers of replica breech and muzzle loading rifles and black powder pistols. They also offer a complete line of accessories for these weapons. Navy Arms also carries the Greener Harpoon Gun (PMA Vol.1 pg.91) including ammo and replacement harpoons.

Include a signed FFL for dealer discount sheet.

Improvised Hand Grenades

by

Dan Moore

A ready supply of improvised hand grenades can be made in the home workshop at a cost of about 75¢ apiece. These grenades are easy to make and are just as effective as regular grenades. There are two kinds, offensive and defensive, in which both use the same fuse assembly. Additionally, these grenades use readily available materials and can be put together in 15 minutes.

The heart of these grenades is the fuse assembly, therefore I will describe its production first. The materials needed for the fuse assembly are:

1. 3/4" PVC pipe in 4" lengths
2. 3/4" wooden dowel in 2" lengths
3. 5 mm glass tubing
4. 1/8" wooden dowel in 1½" lengths.
5. Paraffin wax
6. Concentrated sulfuric acid
7. 50% sodium chlorate and 50% sugar mixture made pasty with water then blotted on paper towels and dried.

A. Construction of fuse assembly

Start construction of the 'fuse' by drilling a 3/16" hole 1" from an end of the PVC pipe. This hole will hold an acid vial. Next insert a length of 5 mm glass tubing into this hole and place the 3/4" wooden dowel into the PVC pipe so it is touching the glass tubing. Drill a 1/8" hole 1/2" from the dowel end of the pipe. This 1/8" hole is where the safety pin is inserted (see diagram). The safety pin is the 1½" length of 1/8" dowel (a hole can be drilled in an end of the dowel and wire inserted to aid in pin removal). With the 1/8" hole drilled insert the safety pin. This will hold the 3/4" dowel in place (see diagram). The length of glass tubing can be removed. The installation of the chemical ignitor remains.

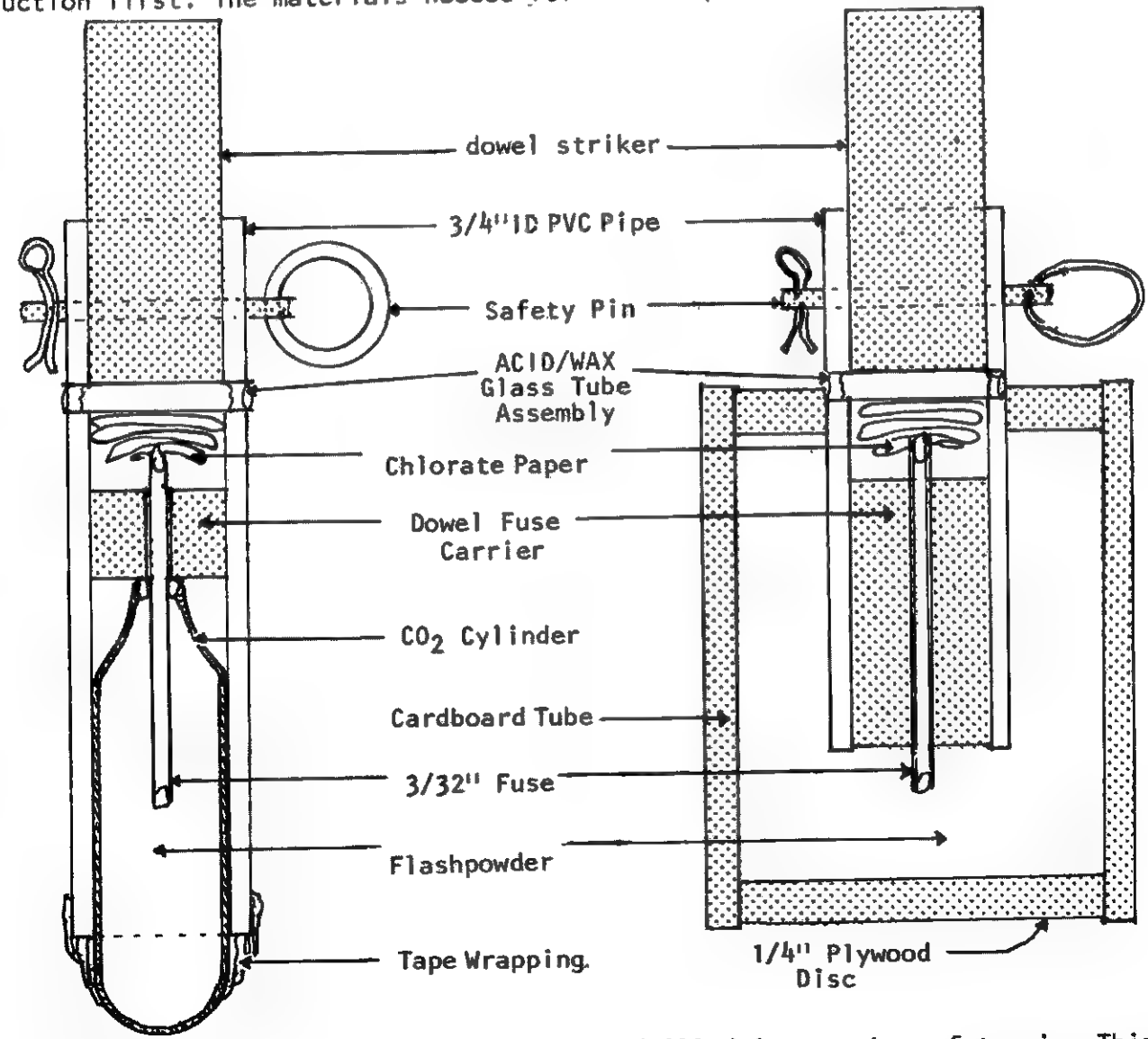

Construction of the chemical ignitor is started by making the acid filled vial. Make this vial by cutting a length of 5 mm glass tubing the same length as the O.D. of the PVC pipe. Next seal one end of the tube with 1/8" of paraffin by dipping it in melted wax. Now fill the tube with sulfuric acid using a glass eyedropper, etc., leaving a 1/8" air space. Fill this space with wax. The vial can now be inserted into the PVC pipe and taped in place. Finish the 'fuse' by inserting a 2" x 2" square of chlorate paper next to the acid vial (see diagram). The fuse assembly is finished.

B. Construction of offensive (concussion) grenade

The materials needed for the offensive grenade are:

1. 2" heavy-walled cardboard tube in 3" lengths
2. two plywood plugs for the above
3. epoxy or glue
4. Flashpowder (PMA Vol.1#7)
5. 3/4" dowel in 1½" lengths
6. 2" length of safety 'fuse'
7. the 'fuse' assembly

Start construction of the grenade by drilling a 3/32" hole through the center of the 3/4" dowel. Then epoxy the fuse into this hole leaving ¼"exposed on either end. Now place a small amount of chlorate paper on one fuse end to insure it ignites (see diagram). Next cut 1" off the open end of the 'fuse' assembly and epoxy the dowel (chlorate paper end first) into it. The chlorate paper on the dowel fuse should contact the chlorate paper in the fuse assembly (see diagram). Continue by cutting a hole the same diameter as the 'fuse' in the center of one of the plywood plugs. Epoxy the fuse assembly into this hole leaving 1" of the dowel end protruding out.Now epoxy this plug into the cardboard tube with the dowel end of the 'fuse' out. Fill the cardboard tube with flashpowder and epoxy the solid plug onto the other end of the tube (see diagram). The grenade is finished.

C. Construction of defensive(fragmentation) grenade

The materials needed for the defensive grenade are:

1. empty CO_2 cartridge
2. 3/4" wooden dowel in ½" lengths
3. epoxy or glue
4. safety fuse in 2" lengths
5. flashpowder
6. fuse assembly

Start construction by drilling a 3/32" hole through the 3/4" dowel. Insert the safety fuse through the dowel allowing ¼" on one end and 1¼" on the other. Epoxy the fuse in place. Now fill the CO_2 cartridge with flashpowder and insert the 1¼" fuse end into it. Use tape, etc.to secure the fuse. Wrap a small amount of chlorate paper around the short fuse end (see diagram). Place the dowel and CO_2 cartridge (chlorate paper end first) into the fuse assembly as before. Be sure to epoxy the dowel into place. Finsih by taping the CO_2 cartridge into the fuse assembly (see diagram). The grenade is finsihed.

D. Firing procedure and miscellaneous

The firing procedure for these grenades is as follows. First,grasp the grenade in your hand with the dowel end up. Second, pull the safety pin out. This arms the grenade. Third,strike the dowel end sharply against the palm of your hand, etc. There should be a 'hissing' sound and a small amount of smoke should come from the dowel end. This indicates that the chemical igniter has functioned. Finally hurl the grenade at your target immediately and take cover. The grenade should explode in five (5) seconds.

You now know all you need to make and use my grenades, however, there are a few additional items. I will list these for convenience.

1. Use the offensive grenade to daze and stun the enemy and use the defensive grenade to inflict casualties.
2. 2" PVC pipe can be used as a fragmentation sleeve for the offensive grenade.
3. Grooves,etc. can be filed into the CO_2 cartridge or fragmentation sleeve for better fragmentation.
4. Wax placed around the striker makes an effective air and water seal, while a coat of varnish on the grenade will make it waterproof.
5. Offensive grenades can be used for smoke or incendiary purposes by replacing the flashpowder with the appropriate filler.
6. Both grenades make effective landmines when buried exposing only the dowel. Sheet wood can be placed on top of the dowel for increased surface area.
7. Survivalists, etc. wishing to store these grenades should remove the acid vials and store them separately.
8. Chemicals and equipment for my grenades can be purchased from Merrel Scientific; address: Educational Modules Inc.,1665

Buffalo Rd.,Rochester,NY 14624. Catalog $1. Merrel has a good line of chemicals and labware with fast delivery. High melting point wax, glass tubing and glass tubing cutters can also be purchased from Merrel.
9. High melting point wax or acid proof epoxy can be used to more effectively seal acid vials. Use this for grenades to be stored.
10. Check PMA Vol.1 #1 for additional grenade information.
Precautions:
11.Make and use several test samples before increasing charge size.
12.Test safety fuse in fuse assembly to make sure it will not jet after being epoxied in place. If it does, try another brand or epoxy the fuse at the dowel ends only.
13.Wait at least two minutes when approaching dud grenades.

Provided these items are considered and the instructions followed anyone should be able to safely make and use these grenades.

CLASSIFIEDS

INGRAM SMG,semi-automatic pistol and carbine and sionic silencer parts for sale to any U.S.resident. Send a stamped & self-addressed envelope for a free illustrated price list to: SPECIAL PARTS LTD,Box 7652 Dept.PMA,Atlanta,Georgia 30357.

ELECTRONIC SPYING,LOCK PICKING, Phone Phreaking,Car Repossession, Explosives - Complete Line of PROFESSIONAL Equipment and Technical Manuals - send $1.00 (refundable) to: SEVERUS, P.O.Box 16992, Jackson MS 39211.

WANTED: High Standard 10-B Police Shotgun. New or used, W/WO Choate extension. Will send FFL with payment. Contact: The Void,Box 1272 Eureka, Cal 95501.

ARE YOU TIRED OF WEAPONS PUBLICATIONS THAT LEAVE OUT THE GOOD PARTS FOR "SECURITY REASONS?"

Articles that never actually show you how to fabricate or improvise weapons and tools in your own kitchen or home workshop?

THESE DON'T

by Kurt Saxon

THE POOR MAN'S JAMES BOND, FIREWORKS AND EXPLOSIVES LIKE GRANDDAD USED TO MAKE—$10.00

THE POOR MAN'S JAMES BOND is the undisputed leader in the field of books on improvised weaponry and do-it-yourself mayhem. It gives full and simple instructions for making tear gas, explosives, firearms, silencers, poisons, zipguns, grenades, knock-out drops, flame throwers and a wide variety of weapons. It also tells you how to buy most of the needed chemicals from your grocery and garden store. Includes: FIREWORKS AND EXPLOSIVES LIKE GRANDDAD USED TO MAKE. This book has hundreds of formulas and processes for making fireworks, blasting compounds, gunpowder, nitro, guncotton, etc. The material was gleaned from formularies written from 1872 to 1907. Plus: George W. Weingart's classic on fireworks, PYROTECHNY. This is the simplest and most comprehensive book on actually making fireworks. It is heavily illustrated in how to make Roman Candles, Shell Cases, Fuses, Colored Fires, Explosive Powders, Rockets, Mortars, Firecrackers, Torpedoes, etc. Plus: the complete text of EXPLOSIVES, MATCHES AND FIREWORKS by Joseph Reilly, 1938. This is a rather technical work on the analysis and testing of explosives. All these combined make THE POOR MAN'S JAMES BOND invaluable for survival.

By Clyde Barrow

Bound Volume ONE THE POOR MAN'S ARMORER — $14.95

The Only Magazine of Improvised Weaponry

Silencers, Rockets, Mortars, Automatic Weapons, Bazookas, Armor Piercing Ammo and much more are easy to make at home with simple hand tools and the PMA. We don't print gun control sob stories, product reviews of $1000 rifles or mercenary fantasy tales; only simple easy-to-understand articles on homemade weapons. All projects can be done in your own home workshop or even at the kitchen table. Most materials needed are available at the local hardware store or hobby shop. Each issue also contains information or sources for gunparts, chemicals, books, tools, and other hard to find materials. **11x14 236 pp.**

THE VOID

BOX 1272

EurekaCA95501

Name _____

Address _____

City _____

State _____ Zip _____

☐ BankAmericard ☐ Master Charge ☐ Check **postage—75¢ per book**

☐ M.O. Enclosed California residents add 6% Ca. Sales Tax

Card Number _____ Expiration date _____

Signature _____

FRAME PLANS **$20.00 PPD.**

See our ad pg 21

LONG BARRELED

AR7 SILENCER

BY CLYDE BARROW

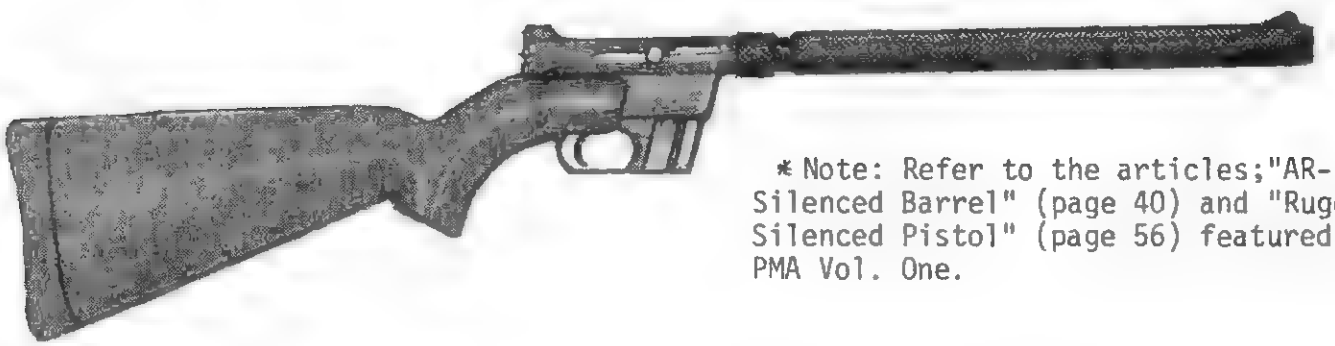

* Note: Refer to the articles;"AR-7 Silenced Barrel" (page 40) and "Ruger Silenced Pistol" (page 56) featured in PMA Vol. One.

MATERIALS:

- ¾" shaft collar-¾"ID x 1¼ "OD x ½"thick
- 1¼" OD-.055" wall aluminum tubing. Available at most hard ware stores.
- ⅜" x 24 TPI tap and die set.Available from hardware/auto supply stores.
- Aluminum disc, 1¼ " OD x ⅜ " thick. Cut from sheet or bar stock available from a local machine shop or by mail from Small Parts Inc. (See review in PMA Vol.1, pp 65)
- Copper packing material made from Chore Girl pads as described in Ruger Pistol article.*

PROCEDURES:

Step 1

Cut the tube to 13 ¾" long. Deburr all inside/outside edges.

Step 2

Use a lathe or hand file to turn ⅜" of the length of the shaft collar to slip inside of the tube (about 1 ⅛" OD).The remaining ⅛" shoulder should be left 1¼" OD. (See figure one).

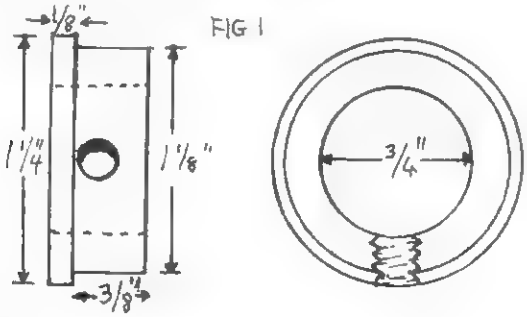

FIG 1

Step 3

Install the collar on the barrel as outlined in the AR-7 article.*

Step 4

Use a punch to drive out the front sight blade from the barrel. Drill bleed holes as before but continue them to within one inch of the muzzle.Note:It's not necessary to remove the aluminum outer barrel housing as in the short barreled version, although it may be done if desired. This will increase volume inside the silencer and may give slightly better sound control. Use a brass brush to remove burrs from the bore after drilling.

Step 5

Grind or file off the front sight ramp and remove the first ⅜" of aluminum outer barrel, at the muzzle, exposing ⅜" of the ⅜" OD barrel liner.

Step 6

Thread the exposed portion of the steel liner with the ⅜" x24" TPI die.

Step 7

Drill and tap the center of the aluminum disk to thread onto the barrel (⅜" x 24 tap).

Step 8

Turn or file ¼" of the thickness of the disk to fit inside of the aluminum tube. Leave the remaining ⅛" shoulder the full 1¼" OD. This shoulder may be knurled or serrated to aid in hand tightening.(fig.2)

Continued on Page 21

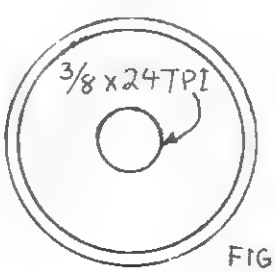

FIG 2

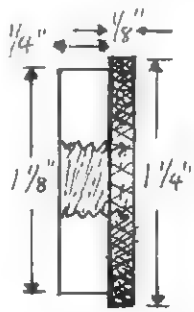

FLASHPOWDER UPDATE

ADDITIONAL FORMULA

by 'J'

PMA recently carried an article on flash powder which correctly pointed out the usefulness of this item. See PMA Vol.1,#7,pg. 112. The formula given was, however, an unnecessarily dangerous one to prepare. I would like to suggest a better formula.

Potassium Chlorate is a highly unstable and dangerous compound when used in a pyrotechnical mixture which also contains sulfur. Combined, these two compounds are sensitive to both heat and friction as well as sparks, and are made more so by moisture absorbed from the humidity in the air. Furthermore, they deteriorate on storage slowly producing sulfuric acid which makes the mixture even more unstable.

Some years back I had the unfortunate personal experience of having just such a mixture spontaneously ignite while I was mixing it on a hot humid day. Had the amount of materials been larger or had I been a bit less lucky, I would have been permanently blinded. Even so, I suffered painful burns to my eyes, face and hands.

Sader, but wiser, I looked for a mixture of equal power, but with better storage qualities and one less hazardous to prepare.

The answer I found involved the use of potassium perchlorate. Although this chemical contains more oxygen than the clorate, it is more stable in both storage and preparation. In addition, I found the sulfur could be eliminated entirely, making the preparation that much simpler.

The ingredients are, by weight, 7 parts potassium perchlorate and 5 parts aluminum powder. Both should be as fine as possible. After weighing they are thoroughly mixed and stored in a sealed container until needed.

This mixture is extremely powerful and very,very fast burning. Well made,with very fine ingredients, it burns about 3-4 times faster than commercially made black powder. It is excellent for use in aerial bombs, large or small firecrackers or any purpose where a quick violent explosion is needed. It is too rapid burning for use in any firearm, and is not suited to such use.

I have kept such a mixture several years with no deterioration, however reasonable storage precautions should be observed. All such mixture type powders, including commercially prepared black powder, should be protected from dampness. All will deteriorate if exposed to large amounts of humid air, but if you use common sense, they will keep indefinitely.

There are also several other mixtures that I have experimented with and found satisfactory. While I do not think any of them are quite as good as that already given, they are noteworthy because they involve the use of other ingredients of the first formula.

Alternative No.1

Bariam Nitrate	4 Parts
Sulfur	1 Part
Aluminum Powder	2 Parts

Alternative No.2

Potassium Perchlorate	12 Parts
Sulfur	8 Parts
Fine Sawdust	1 Part

Alternative No.1 is probably better than No.2 which does not seem to keep as well as the others. However, number 2 makes a very violent explosion. Furthermore it is the only really good formula I have ever seen for flash powder which does not require aluminum powder.

These mixtures, particularly the perchlorate-aluminum powder one, will burn and if confined, explode almost no matter how badly they are mismeasured or poorly prepared. Like most things though, the end result is reflective of the care put into production. The most important thing is to have the ingredients as fine as possible before mixing them together. There is not much you can do about the aluminum except to get the finest powder possible. The potassium perchlorate can be gently ground in a mortar and pestle or by other suitable means if necessary. The goal is to have the texture as near to that of flour as possible. If you have the consistency of table salt, it will work, but not as good.

The second thing is that the ingredients be thoroughly and intimately mixed. If you achieve the desired degree of fineness in the ingredients, the mixing is not very hard,but it must be thorough. Mixing is most easily accomplished with a flat wood stick on several layers of newspaper. Sifting through a small screen, as fine a

screen as may be obtained, several times is very useful. It should be done after a preliminary mixing and not only mixes the ingredients but sorts out any large pieces which can then be broken up. Avoid the use of metal and ceramic utensils because of spark and contamination hazards.

With a little practice, it is easy to judge the quality of such powder by placing a small quantity on a fire resistant surface in an open area and lighting it with a short piece of fuse. Good quality powder will burn almost instantly with an intensly bright flash, and a puff of white smoke.

If made with reasonable care, any of these powders are equal to that usually found in commercially manufactured firecrackers such as M-80's.

UPDATE on Anti-Terrorist Riot Grenades

"From Q branch"

Recent coverage of international terrorist events by the popular press and T.V. media (not to mention the 'underground' press) has brought about a desire in the public sector to hear more about the anti-terror forces and their weaponry. Typified by inquiries made by both the editor and readers of the PMA is the wish to know more about the 'newly designed riot grenades' which were used most recently in the rescue in Somalia, in October of 1977. Traditional tight-lipped secrecy on the part of the police,military and civil authorities has resulted in much speculation concerning the nature of these grenades. The generalization promulgated even in the PMA follows thusly: "The unit reportedly doesn't fragment, and is designed to cause temporary blindness with a brilliant flash and a shock-like reaction from its tremendous concussion. An official was quoted as saying the grenade is intended for use without causing permanent injury." (PMA Vol.1#4).

A response from a Canadian reader, while providing some insight, only served to further confuse the issue through some innacuracies and misconceptions which went as follows: "The Riot Grenade that was mentioned in the editorial of issue #4 was made in Britain and was develoved by them to fight the I.R.A. after an incident in London where the security forces had to lay seige to a bomb factory run by the terrorists. The weapon was to be used against the Moluccan crowd on the train and Britain sent over some S.A.S. Commandos to assist the Dutch as they later did the Germans with this grenade. The weapon is short lived, however, as it works by surprise flash and noise. Air terrorists will be expecting such a move and can wear earplugs and dark glasses to negate them." (PMA #5 Vol.1).

This well-meant response, while revealing a close cooperation between between the various security forces, (Yes,the Special Air Services; S.A.S.,did assist the German's Grenzschutzgruppe Neun; G.S.G.9, at Mogadishu and provide them with a British-made version of this grenade), it failed to accurately describe the grenades. In addition it seems unlikely that, whatever their intent, the British would actually use such a grenade in a raid on a bomb factory:sympathetic detonation of explosives is a common enough occurrence to recommend against their use in such a raid.

A very accurate description of this weapon exists in a story entitled "When the Terrorists Strike...", featured in the Mar.

'78 issue of Popular Mechanics. This article covered the various anti-terror groups and their weapons, including the grenade in question. However, a flaw exists in said article between the physical description of the grenade, which is revealed as the Israeli No.14 (assault) grenade, and the illustration accompanying the article; which suggests a loss of thought between the author and the illustrator. In turning to the current edition of Brassey's Infantry Weapons of the World (Bonanza Books; Crown Publishers,Inc.; One Park Ave.,NY,NY 10016) we find that the data presented in the Pop Mach. story is that of the No.14 Offensive Hand Grenade, as produced by Israel, so we may conclude that the illustrations are either erroneous, or pertain to an,as of yet, undisclosed fuse modification solely for antiterrorist use.

The No.14 Assault (or Offensive) hand grenade was originally manufactured by Israel Military Industries, of Tel Aviv, after the fashion of the U.S. MK3A2 Offensive Hand Grenade, and is currently in service with Israeli troops as a combat weapon. A pot-type grenade, made of laminated paper with sheet-metal ends, and crowned with a Western-type delay fuse, the No.14 grenade contains 200 g (7oz.) of flaked TNT. It is 64 mm (2½") in diameter, and stands 115 mm (approx. 5") tall. Total weight is 325 g (11.5 oz.), and the grenade can be thrown approximately 30 meters (33 yds) by the average soldier. As one can see from the accompanying illustration from Brassey's, the issue fuse is of the pin, lever and striker type; common to US grenades, and has a delay of 4½ seconds. The Pop.Mech. text is in error concerning the line "... the grenade fuse is actuated when the pin is pulled and the weapon explodes just 4.5 seconds later." While the fuse delay time is stated correctly, the countdown to detonation of this type of fuse occurs only after the safety lever , or 'spoon', is released, irregardless of how much earlier the pin was pulled. This grenade is also produced in Germany, where it is know as the DT11B1 Assault Grenade, and a similar weapon is made in Great Britain. Incidentally, the fuse in these grenades are shipped and packed in separate wooden boxes of 200. Grenade bodies are sealed in plastic bags and packed 500 to the case.This is to separate the high explosive component from the detonator. The grenades are to be fused by the user when needed.

The grenade is "advertised" as safe, on the merits of its being an offensive grenade having the shock killing and stunning effects without the lethal fragments and large danger radius commonly associated with defensive (fragmentation) grenades. However, common sense and the data presented by various military manuals offers startling contradictions. Contrary to what the airlines, news media, and military press releases would have the flying public believe, these grenades were designed to kill in enclosed places (like caves,bunkers,closed rooms, aircraft cabins,etc.) and in the field (when in close proximity) by the pressure blast. Any stunning effect meant to disorient the enemy, however welcome, is only a by-product of the blast effect. The effective casualty radius in an enclosed place is more than the 2 meters (approx.6') radius on open ground,making airline passengers as vulnerable as any terrorist they are used against. Casualties resulting from such offensive grenades are due mainly to the shock wave causing concussions,burst eardrums and,according to Emergency War Surgery (First United States Revision Emergency War Surgery Nato Handbook), blast injuries may include death through hemmorhage of lung and respiratory tissues and blunt trauma abdominal injuries. U.S. Army publication FM 23-30 (Grenades and Pyrotechnics) even lists the American counterpart as serviceable as demolition charges for felling trees and destroying equipment!

Any theories about terrorists using sunglasses to offset the effect of these grenades are unfounded, as only the British S.A.S. have added a dash of flash powder to their Israeli-pattern grenades, and with nearly a half-pound of TNT already in these grenades their meager alteration may be well into the realm of diminishing returns.

Since parts of the fuse and sheet-metal ends of such grenades can be projected to and cause injuries at up to 200 m (220yds), it's a wonder we didn't hear about any passengers being killed or injured specifically by these bombs of their blast during the Somalis raid. However, since blast effects may not appear for some time after exposure, it is possible that the story had grown cold, and, not wanting to bring any blast or fragmentation-caused wounds to light and hence muddy the record of the valient rescuers, the press had departed before the hospitals began to fill.

Continued from page 17

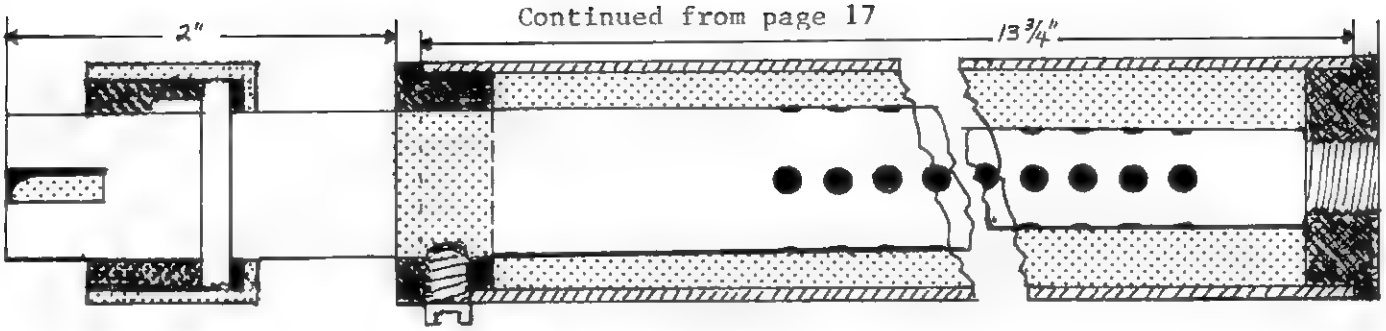

Step 9

Install the aluminum tube on the rear shaft collar, and thread the front end cap in place. Use screws to secure the tube to the rear collar as outlined in Vol.1.

Step 10

Install a front sight (if one is to be used).

Step 11

Pack the completed silencer with copper baffles as outlined in tne Ruger article in Vol.1.

Step 12

After testing everything for proper fit and functioning, disassemble and coat all pieces with MG Coat.(See Vol.1 pg 74)

Note:

This same procedure may be used to construct a vented handguard. Omit the barrel drilling step. Vent holes in the outer tube should be about ¼" in diameter and spaced about ¾" apart.

BUILDING A MODEL MACHINE PISTOL?

10 Pages of FULL SIZE DRAWINGS.16 Pages of TEXT w/COMPLETE INFO for Building ALL THREE Versions of the M10/M11 LOWER RECEIVER.

M10 Lower Receiver and M11 PLANS

gun is easy to make with simple hand tools/local materials

FULL SIZE DRAWINGS FOR

- MAG. HOUSING
- TRIGGER GUARD
- STOCK CARRIER
- SEAR GUIDE PIN
- REAR SIGHT PLATE
- MAIN FRAME BODY

COMPLETE INSTRUCTIONS

build as a DISPLAY MODEL or a FUNCTIONAL* SMG!
*(requires class 2 stamp)
completed FRAME will accept all factory parts

45 9mm and 380 included

Includes Laying Out, Cutting, Bending, Welding and Finishing.

Also contains Tips on Making Forming Dies and an Alternate Process using Pre-Bent Metal Pieces available at most hardware stores.

Dimensions used are the Same as the Actual Receivers, Factory Parts will fit with the Correct Clearance for Proper Functioning.

26 Pages, 8½ x 11

Frame Plans / box 1272
Eureka CA /95501

$20 POSTPAID
MONEY ORDERS ONLY

60mm mortars

Part 1

By Clyde Barrow

The following is part one of a series on building a 60mm mortar patterned after the type used by the U.S.in WWII. This same design with minor alterations, is still in production and standard issue in most NATO countries. The complete setup weighs about 40 pounds and breaks down into three sections; baseplate,bipod and barrel. This allows for quick setup/takedown and easy transport. The mortar bombs, either high explosive or smoke type, weigh just under 3 lbs. each. The 60mm mortar is the cheapest and simplest method available for a two or three man squad to inflict artillery level damage to fixed targets at ranges of 300 yards to ½ mile or more. Although the design specs presented can be altered for use in producing an 81mm mortar, the increased weight required limits the larger unit to use as a vehicle mounted weapon.For reasons of mobility, we will concentrate on the 60mm unit.

Once Fired 60MM Inert Mortar Rounds

Practice Bombs

60mm practice rounds are available from S and R Company, RD 2 Box 71, Arkport, NY 14807. Price is$6.00 each plus shipping charges (3 lbs.each). Practice rounds were identical to live ammo except that they carried a small smoke charge instead of an explosive. They were used for target practice only.

The examples from S and R have been "demilled" by unscrewing the nosepiece and drilling a 7/16" diameter hole through the fuse assembly. The nose pieces are included although impact has smashed the plunger into a permanently "fired" position. These rounds look as if they have been in storage on the ocean floor since WWII. They are heavily caked in rust, although they don't look too bad after a good bath in naval jelly (rust remover). The fuse bodies and brass primer units are firmly corroded in place. These rounds are not as hopeless as they sound. The bodies and tail sections are in good shape and one would be hard pressed to copy them for the price of $6. The fuse and base assemblies could be either drilled and threaded to accept repair sections or drilled and chiseled out entirely, to be replaced with new units.Even if you intend to produce all of your own rounds from scratch, I suggest you obtain a couple of these practice bombs for reference. I doubt if they will be available for long, and they are the only examples I've seen for sale at less than collector's prices of $20 or more.

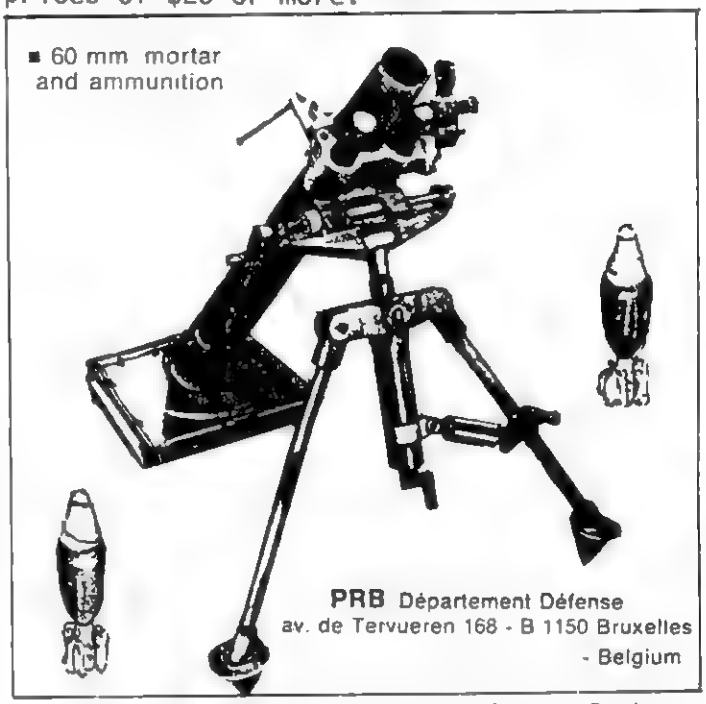

The 60mm mortar round consists of three main sections. 1) An aluminum plunger housing w/ plunger and firing pin that screws into the main fuse body, also of aluminum. 2) A forged steel body threaded at the front to accept the plunger/fuse assembly and at the rear for attachment of the tail assembly. 3) A tail assembly consisting of a machined tube, closed and threaded at the front to fit the body, and threaded at the rear for the brass primer unit. The tube is hollow and carries the launching charge. The bomb is stabilized in flight by four sets of stamped steel fins that are spot welded to the outside of the tube. A stamped steel ring with spring clips is fitted around the front of the tail. These clips are intended to hold secondary sheets or bags of propellant for increasing the range of the round.

The following dimensions will allow you to copy all components of the 60mm bomb design.

GENERAL. The 60-mm mortar fires complete, semifixed rounds of ammunition. The rounds are "complete" since each round comes packed in an individual container, complete with its fuze and propellent charge. The rounds are "semifixed" since part of the propellent charge may be removed to vary the range.

All rounds are provided with stabilizing fins which make the round stable in flight and cause it to strike fuze end first, even though it is fired from a smoothbore weapon.

Each round (except the training projectile) has a propelling charge consisting of an ignition cartridge in the base of the fin assembly and four propellent increments (bundles of sheet powder) which are fitted between the blades of the fin. Each increment is called a *charge*. To prepare a round for firing with a certain charge, those increments not needed are removed from the shell.

Ammunition allowances for training are found in T/A 23-100.

DESCRIPTION AND CHARACTERISTICS. Description and characteristics of the principal classes of 60-mm mortar ammunition are:

High Explosive (HE), M49A2 (fig. 8).
Weight—3.00 pounds.
Color—Olive drab with yellow markings.
Filler—TNT bursting charge.
Fuze—M52 super-quick fuze.
Range—2,000 yards.
Used for fragmentation and casualty effect against personnel.

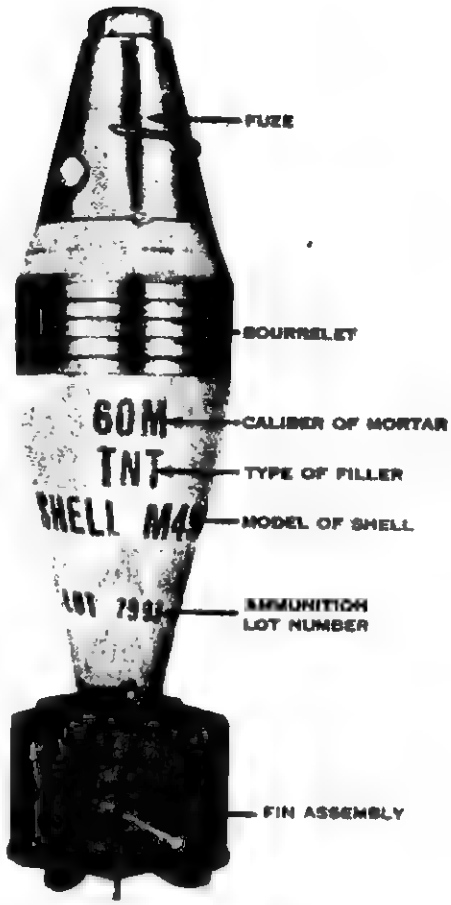

FIGURE 8. SHELL, HIGH EXPLOSIVE M49A2

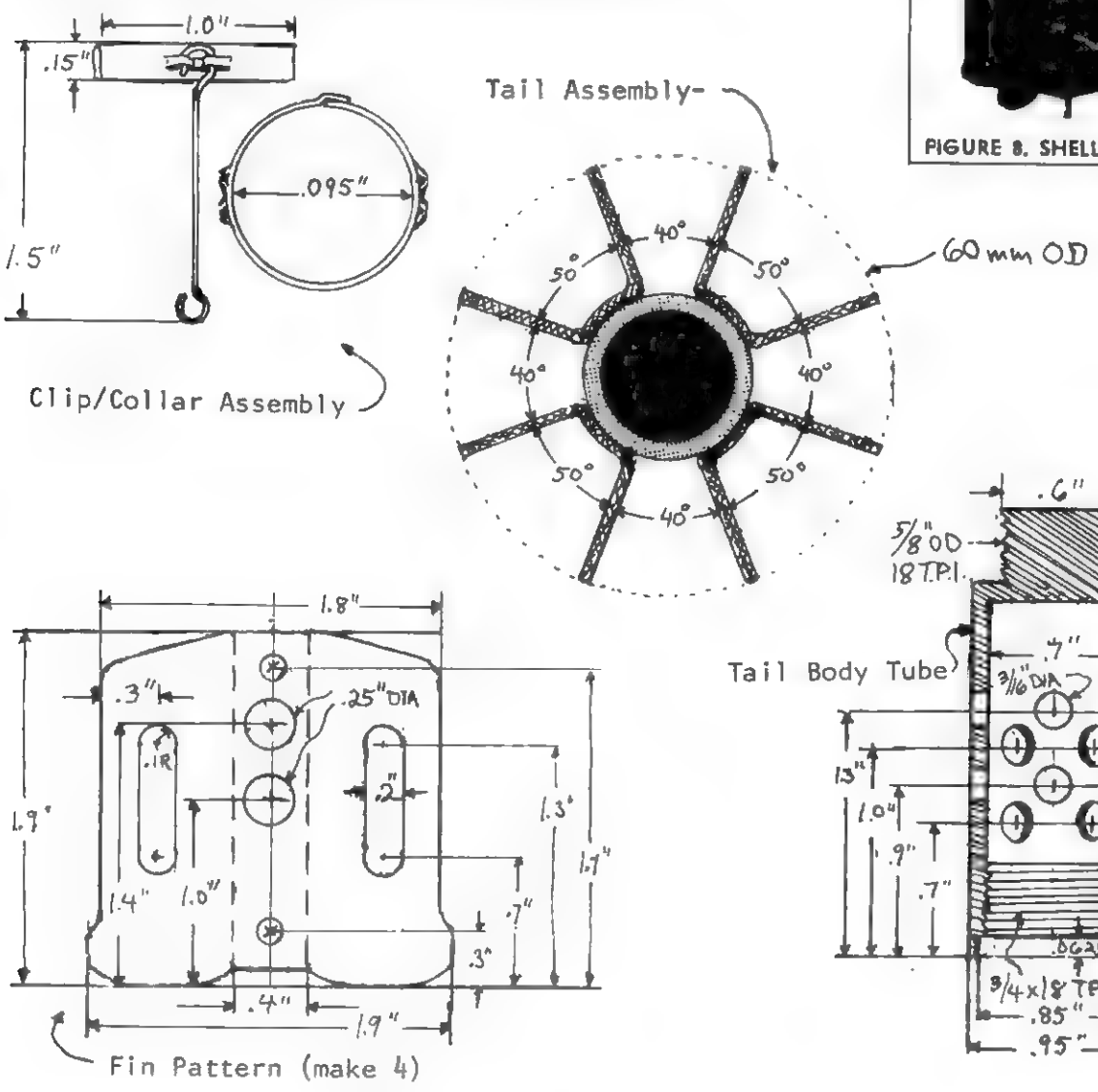

M52 FUZE. General. This standard fuze, (fig. 12), a super-quick type, is identified by PDF (point detonating fuze) M52 stamped on the body. This fuze is designed to function before any penetration occurs, permitting the maximum surface effect of fragmentation of the shell. For use in the field, it is issued assembled to the shell as a part of the complete round. To prepare for firing it is only necessary to remove the safety wire.

Safety features. This fuze is classified as bore-safe. It is equipped with safety devices that keep the bursting charge from exploding while the shell is in the barrel—even should the primer or detonator malfunction.

A safety wire passes through the body of the fuze and the set-back pin, thereby locking all movable parts in their original safe position. Pull the safety wire just before firing (fig. 12). If a round is fired without pulling the safety wire, it may or may not explode upon impact. The safety wire is designed to lock the set-back pin in place only during normal handling of the round before firing.

The set-back pin, held in place by the safety wire, in turn locks the safety pin in position. The set-back pin is supported by a spring and is positioned in a recess of the safety pin. Until the set-back pin moves out of this recess the safety pin is locked in the body of the fuze.

The safety pin, held in place by the set-back pin, is the main locking device of the fuze. It holds the slider (which contains the primer and detonator) in its retracted position and prevents premature alinement of the various elements of the powder train.

Functioning. The fuze is not armed until the primer and slider detonator are alined with the firing pin and booster lead. The first step in the arming of the fuze is the removal of the safety wire just before firing. The shell, when inserted in the barrel, slides down until the primer of the ignition cartridge strikes the firing pin of the mortar. The combined forces of the shell striking the breech of the mortar and the blow delivered to the shell by the propelling charge gases cause the inertia of the set-back pin to overcome the resistance of the set-back pin spring. This permits the set-back pin to move toward the base of the fuze (fig. 12). This movement withdraws the shank of the setback pin from the recess of the safety pin. The safety pin, now being released by the set-back pin, is thrown outward by the action of the safety pin spring, but is prevented from leaving the fuze by striking and bearing against the bore of the mortar. At this time, the safety pin has not moved far enough to disengage the slider, and the slider remains locked in its unarmed position.

When the shell leaves the muzzle and the safety pin no longer rides against the bore, the pin and spring fly out of the fuze, thereby releasing the slider. Under the action of the slider spring, the slider is forced to the opposite end of its chamber. The slider locking pin, pressed upward by its spring and guided by a groove in the lower surface of the slider, is lined up with a recess in the slider. The spring forces it into the recess, locking the slider in position and completing the alinement of the powder train. At this time, the fuze is completely armed.

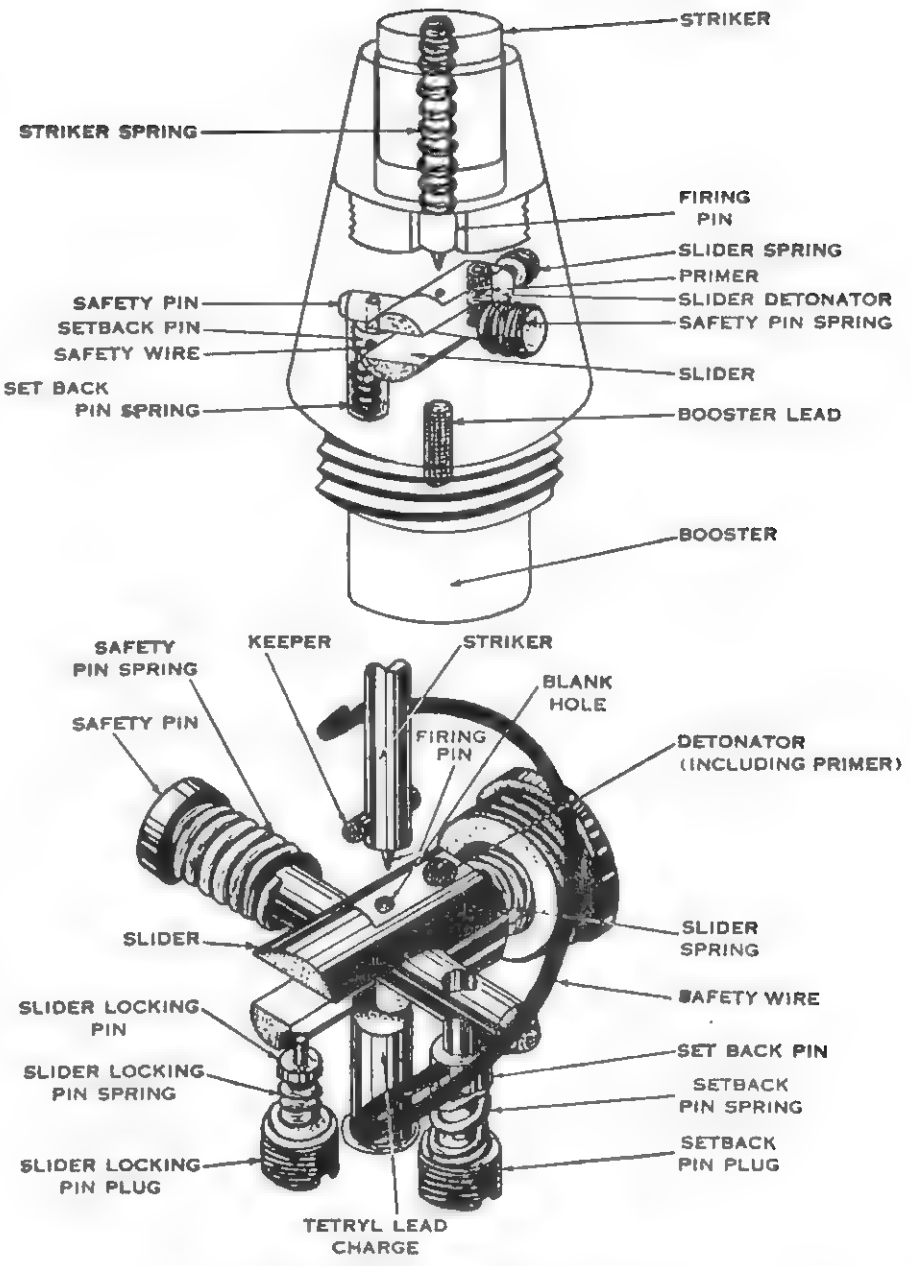

FIGURE 12. WORKING PARTS OF M52 FUZE

When the shell hits the ground, the striker is compressed and drives the firing pin into the primer of the slider detonator. The flash from the primer ignites the detonator, which in turn explodes the booster lead and the booster. The explosion of the booster detonates the TNT filler in the body of the shell.

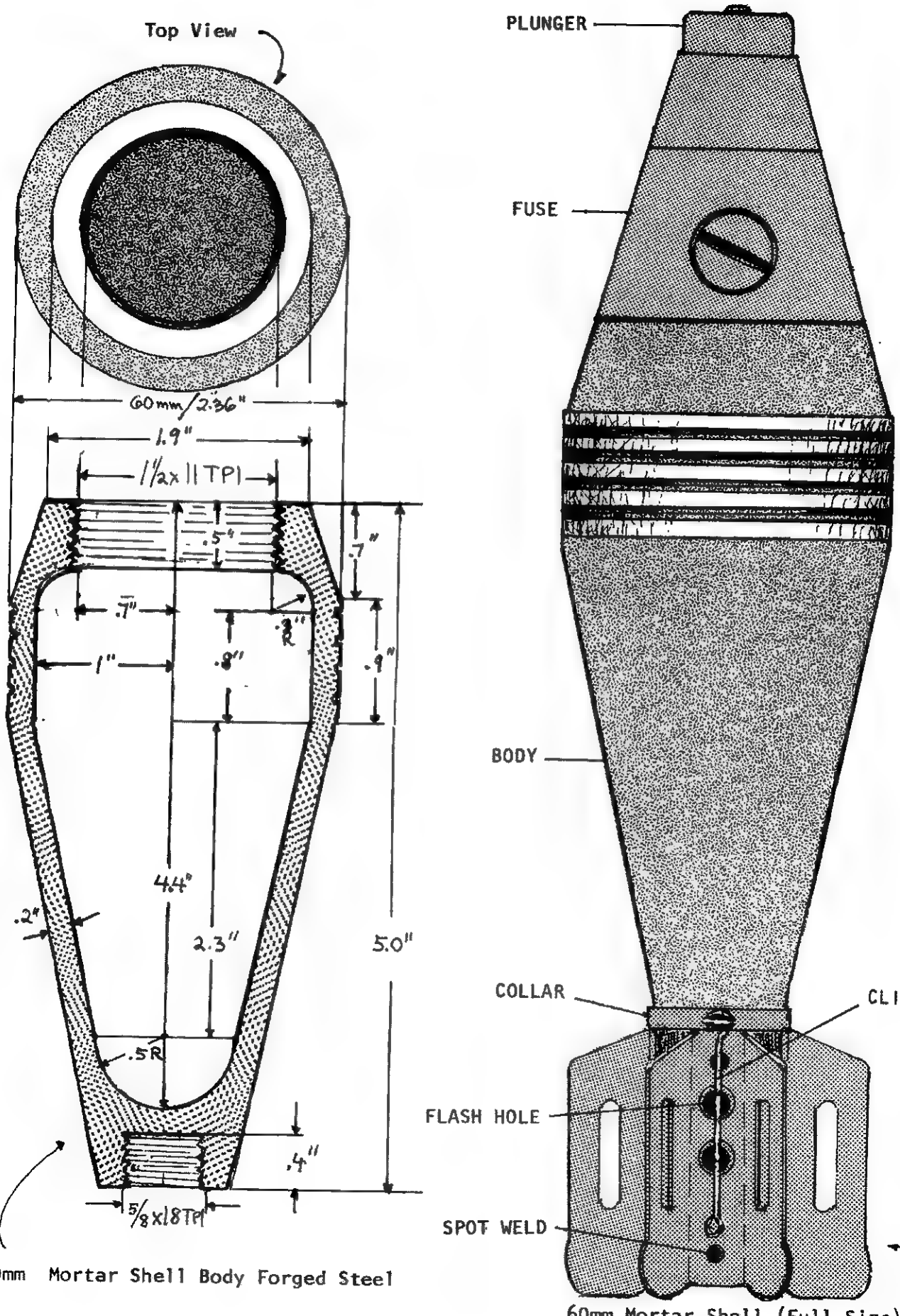

60mm Mortar Shell Body Forged Steel

60mm Mortar Shell (Full Size)

Continued Next Issue

Here is How a Small Plant

Forges 81-mm. Mortar Shells

Reprinted From
Metal Products
Plant Manual - 1941

By CHARLES C. BARRENBRUGGE
Designing Engineer, Portland Forge & Foundry Co., Portland, Ind.

THE Portland Forge & Foundry Co., a small plant with less than 200 employees, is proud of its achievement to be among the first to produce the 81-mm. trench mortar shell forging, said to be the most complicated hollow forging ever produced on an upsetter. This forge shop has 30 years of forging experience behind it, however, and normally forges about 10 per cent of all alloy steel manufactured for forging purposes. The company's engineers are assisting numerous other plants throughout the nation in solving their problems in shell production.

DURING the summer of 1940, the U. S. Government was making a survey of all manufacturing facilities throughout the country so it might have a record of all available industry which could be used in the production of armaments to meet the ever growing emergency. Educational orders were being placed with various concerns throughout the nation. New methods of shell production were being studied. The methods and practices of the First World War had become obsolete. After 20 years of mass production to become the world's greatest producer of automobiles, radios, refrigerators, etc., American industry was ready to meet the challenge.

Eager to do its part toward national defense, the Portland Forge & Foundry Co., without an educational order or expense to the government, began experiments to produce an 81-mm. shell forging completely nosed, as shown in Fig. 1. Previous to this time, the shell was made from a casting or forged with an open end and nosed after rough machining. About 1938, an upset method was developed to make this shell on a 5-in. forging machine. Although several good forgings were produced, it was found that the method was unreliable from a production standpoint.

Because the inside cavity of the shell had to be held to an 0.020-in. tolerance, many manufacturers were of the opinion that this could not be accomplished without precision machinery.

Hence, attempts were made first to purchase a new upset forging machine for this job, but it was impossible to get delivery until March, 1941. Portland Forge engineers were determined, however, to develop a new and reliable method of producing this shell, even on old equipment, since this was a race against time. Actually, a 5-in. Ajax forging machine of the 1920 vintage was employed. To overcome the many disadvantages of such an old forging ma-

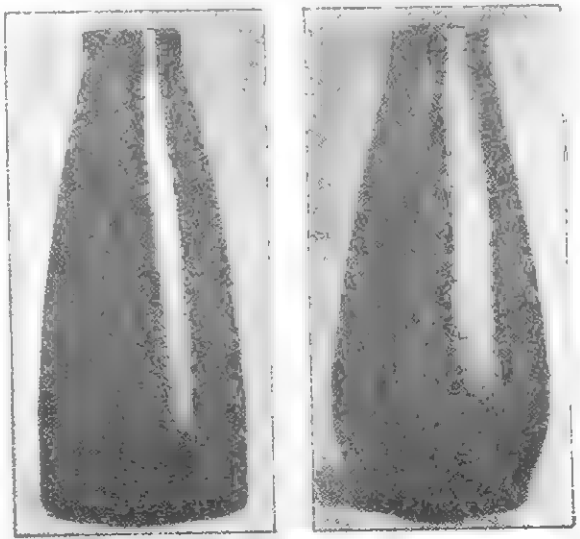

FIG. 1 — (Left) 81-mm. shell forging as made by old method required rough machining before being nosed. (Right) New upset method completely noses shell as forged.

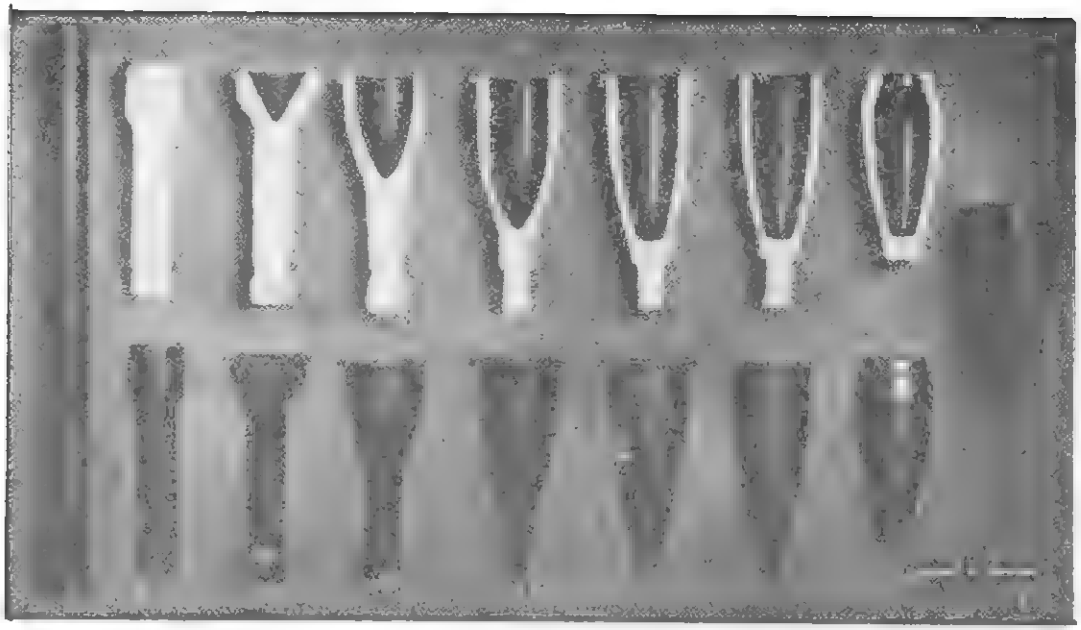

FIG. 2 — Progressive steps in the forging of an 81-mm. shell in an upset forging machine by the displacement piercing method. Two shells are forged, one from each end of a single bar 1¾ in. diameter x 23 in. long. The only loss of material is the small piece shown in the lower right hand corner and the collar trimmed from each forging before nosing.

chine, it was necessary to make up the difference in good die and punch design.

The shell forging is completed in seven passes as shown in Fig. 2 using 1¾ in. diameter stock. The shell bars are sawed approximately 23 in. long, suitable for forging two shells which are upset from each end of the bar.

The first punch and die upset the stock and neck-in the middle of the bar. This preliminary upsetting and nicking of the stock is done in order to assure the proper centering and forming of an even collar which is necessary in the following operations for sound concentric forgings. The second punch pierces the billet which is held and centered by its necked-in part and by the collar on the upset end. The third and fourth punches gradually expand and elongate the cavity in the forging. The fifth punch sizes the shell from the outside and the inside. In the sixth pass the collar on the front of the forging is trimmed off. On the last or seventh pass, the shell is nosed and cut from the bar at the same time. It rolls out the side of the machine on to a conveyor which takes it to a bench where it is hot-inspected.

The inspector then places it on a pin-type conveyor which makes it possible for the air to circulate freely around each shell, thus assuring that the physical properties of each forging are the same. Each conveyor hook has two pairs of pins, one above the other, holding four forgings in all. By the time the shell reaches the final inspection room, it is completely cooled. Here the shells are given a 100 per cent inspection before they are passed on to the shot blast machine which cleans the inside cavity at the rate of two every 30 sec. After the cleaning operation they are oiled inside with a pressure gun sprayer to protect the interior from rust while in transit to the machining contractor.

Today, this typical small industry of the Middle West is now in full production equipped with the latest type of forging machinery and machine tools. The upset forging is performed on a new 4-in. Acme machine. The layout is extremely compact, with a minimum of manual handling between conveyor carriers and machines. So simple is the set-up, that only three men are actually needed to produce the forging, namely, the forging machine operator, the heater, and the inspector. Production ranges from 80 to 100 per hr. with an average of 600 to 700 for an 8-hr. shift. This rate could be stepped up about 20 per cent, but it would decrease considerably the tool and die life.

FIG. 3—Inspector placing shell on pin type conveyor. This type of conveyor allows the air to circulate freely around the shell while cooling, thus producing a uniform microstructure of the steel and making the physical properties of each forging the same.

The first four and last two punches are made from a treated alloy die steel, and are not heat treated after machining. They will run from 20,000 to 25,000 forgings. The fifth punch is made from Durodi and treated to a hardness of about 64 scleroscope. Its life is about 8000 shells. All the dies are the inserted type, making it very easy to replace a worn cavity. The water cooling and the proper lubrication of the punches before making each forging are as essential as the accurate tool and die design.

Durodi is a special alloy steel containing chromium, nickel and molybdenum, made by A. Finkl & Sons Co., Chicago. —Ed.

An oil fired furnace is used to heat the steel billets to a temperature of 2100 deg. F. The furnace is three times larger than is needed to heat the amount of steel necessary to keep the forging machine running at 100 shells per hr. This large capacity furnace is probably the reason Portland Forge never experienced any trouble forging SAE X1314 steel. This material caused other manufacturers so much grief that it was necessary for the Ordnance Department to change the steel specification to SAE X1335.

This small industry which normally forges about 10 per cent of all alloy steel manufactured for forging purposes, is today among the few who have produced the 81-mm. shell on a mass production basis. About 80 per cent of the output of the entire plant is for defense. Forgings for tanks, army trucks, gun carriages, machine tools, etc., are going from the plant in a steady stream to various points in the nation as evidence that small industry is playing an important part in the defense program.

FIG. 4—By the time the shells reach the inspection room they are completely cooled. Here a U. S. Ordnance Department inspector is seen giving the shells 100 per cent inspection with various type of gages. Note the simple form of pin stands for dial indicating the amount of eccentricity, etc.

RIGHT

FIG. 6—This is an 81-mm. trench bomb completely machined and painted, with tail-piece attached. It is ready for shipment to an arsenal to be filled with explosive.

BELOW

FIG. 5—This shot-blast machine cleans the interior of the shells at the rate of two every 30 sec. After this, the cavities are sprayed with oil.

Hydraulic Arbor Press

POPULAR MECHANICS
1938

Garage mechanics and others who do not have an arbor press can improvise one from a hydraulic auto jack. The press has many uses besides arbor work. It can be used for forming sheet metal in dies, punching holes, straightening bent rods and similar work. It consists of four drill-rod posts, which are attached to a base and a header plate. A platform, which has bushings or sleeves welded in holes drilled near each corner, slides up or down on the legs, the bushings assuring squareness of the platform to the header plate. Both the plate and the platform are provided with tapped holes for conventional clamping of various setups.

a

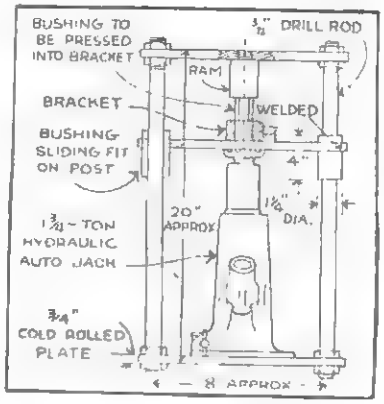

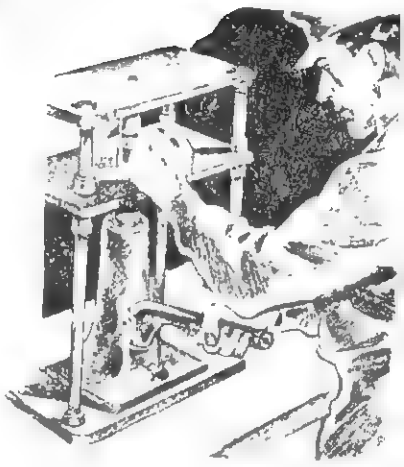

b

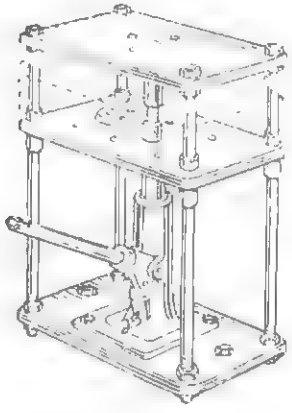

a- Homemade hydraulic press, circa 1938.

b- Manual press from B-Square Co. (see catalog review).

c- Commercial hydraulic press, jack and accessories. (Sears catalog)

c

Hydraulic Hand Jack

Low as **$27.99** 8-ton capacity

Deliver full lifting power in upright or side position.

CONSTR: Made of heavy-duty commercial-quality steel. Cylinder, housing and base precision fit for virtually leak-proof operation. 12 and 20-ton jacks with built-in carrying handle. Imported.

Lifting cap . . . Cast iron. Grooved for gripping power.

Piston and cylinder . . . Precision-machined steel for excellent fit and easy operation.

Base . . . Cast iron with release valve.

Handle . . . 2 or 3 locking pieces, depending on model.

LOAD CAPACITY, LIFTING RANGE, ORDERING INFORMATION. *Order from chart below.*

Load capacity	Total lifting range in inches	Hydraulic lift in inches	Screw extension in inches	Catalog Number	Shpg wt lbs.	Price each
8-ton	9¼ to 18	5¾	2⅞	28 GT 12014C	17	$27 99
12-ton	9½ to 18⅜	5⅜	3¼	28 GT 12016C	20	35 99
20-ton	9 11/16 to 18⅝	6	3	28 GT 12017C	32	61.99

(8) 1½-10-ton Hydraulic Press

1½-10-Ton Hydraulic Press **$229.99**

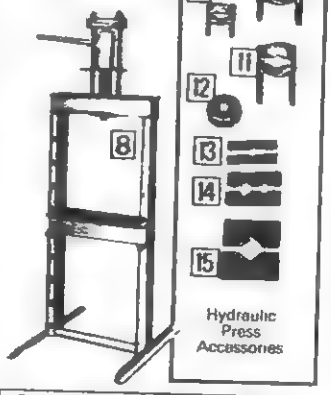

For removing and installing bearings, U-joints, gears, bushings, ball joints, pulleys, etc. 52 inches high (excluding jack).

ORDER INFO: Use with up to 10-ton hydraulic jack. See accessories sold below. Pay motor carrier charges from Milwaukee, Wisc. factory. Allow time. No C.O.D.'s. Shpg. wt. 140 lbs. F28 GT 12001N $229.99

(9 thru 15) Accessories for Hydraulic Press

Do more types of work without special rigging or damage to parts.

ORDER INFO: Sent from Milwaukee, Wisc. factory. See Shipping Note *below. Order from chart below.*

Item	Description	Catalog Number	Wt. lbs.	Price
(9)	Small Bearing Puller	F28 GT 12003	6	$42.99
(10)	Large Bearing Puller	F28 GT 12005	20	129.99
(11)	Medium Bearing Puller	F28 GT 12006	13	89 99
(12)	Safety Shield	F28 GT 12004	2	6.89
(13)	Small V-blocks (pair)	F28 GT 12008	9	17 99
(14)	Arbor Plates (pair)	F28 GT 12009	19	19.99
(15)	Large V-blocks (pair)	F28 GT 12007	46	39.99

Letters cont. from page 5

Dear Mr. Barrow,

I am writing to point out certain crippling flaws in the "Guided Missile" design published in Volume I, #7, of the PMA.

The first and most obvious flaw is the lack of aerodynamic stability. The devices from which the planform of yours is copied reply for stability on sophisticated semi-automatic guidance systems which spin the missile on its axis in flight and switch control functions from one set of fins to the other depending on the attitude of the missile at the moment.Most, to simplify control and lower the needed skill level, have a permanent "up" bias to keep the thing up long enough for the operator to sort himself out and assume control. Yours, of course, has no such guidance system and will therefore be inherently unstable.

The second flaw is the lack of a sustainer motor. This is a low-thrust, long-burning motor which powers the vehicle all the way to the target, enabling the operator to steer the device along his line-of-sight and making it unnecessary for him to know the range, except in very general terms. Since your device's boosters will burn out in a few seconds and its planform, with center of pressure (cp) well behind the center of gravity (cg) prevents an efficient glide, your device's trajectory will be essentially ballistic rather than aerodynamic. All control corrections will have to be made during the thrust phase with the missile climbing steeply. The firer will need lightning reflexes, theodolite eyes and the brain of a ballistic computer. In its present form, therefore, it is not practical.

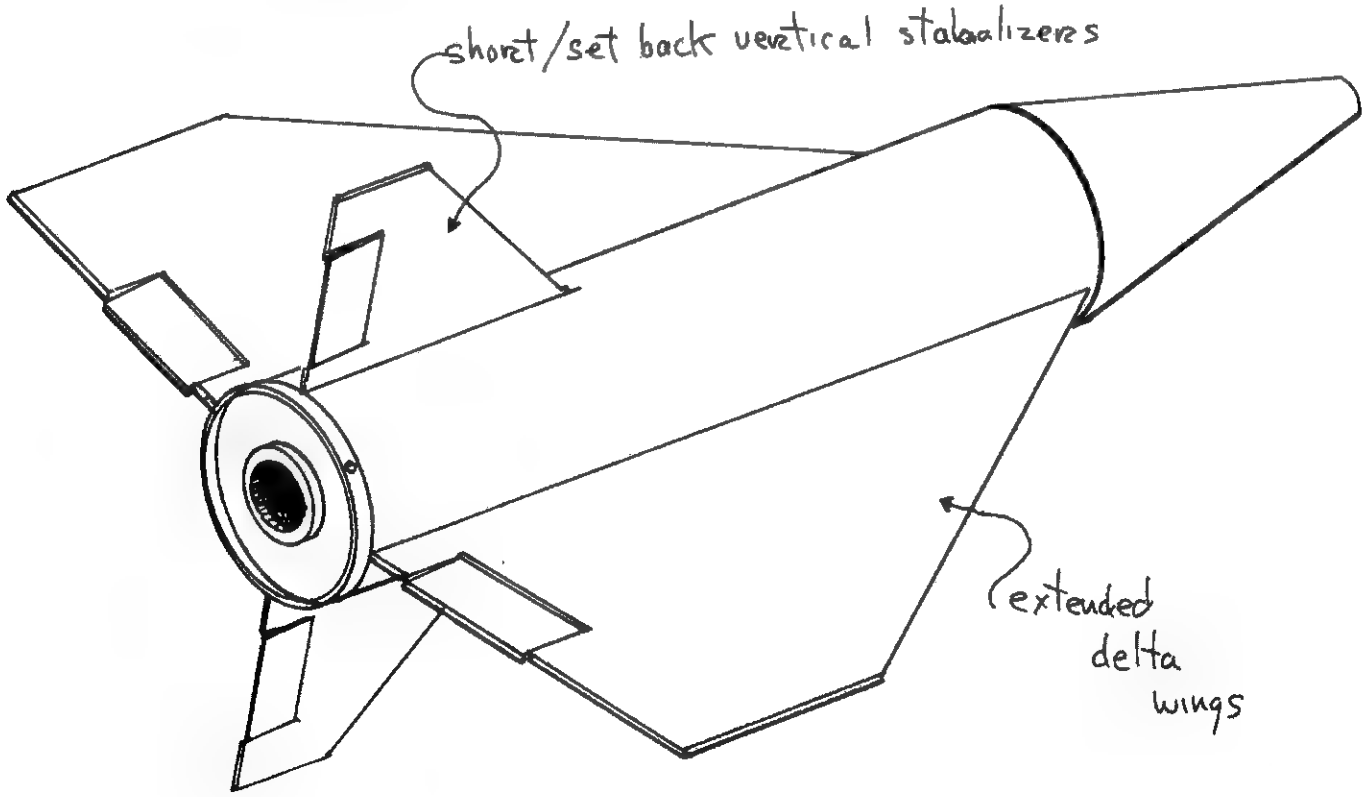

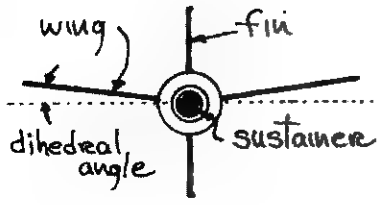

The aerodynamic problem is easily solved: I suggest a pair of delta wings with c.p. closeto but slightly behind the c.g. of the missile. They need not be cambered but should have a definite dihedral angle to keep the device on an even keel, (figure 1). The vertical fins should be smaller and set back as far as possible.

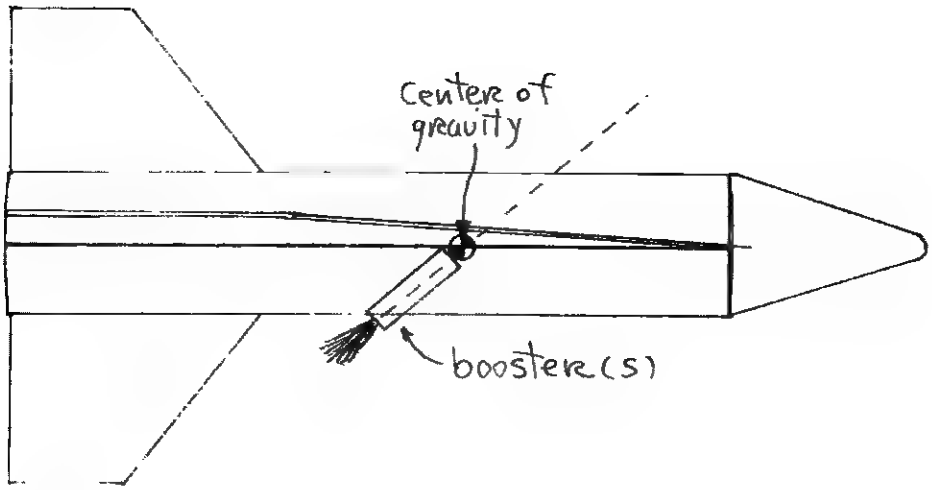

The sustainer is another matter. I can't be specific about designs since I have no data available to me. The specifications (long burn, low thrust, visible trail) suggest a long, thin, end-burning grain 'spiked' with something to give a colored exhaust flame. The only propellant I can think of that burns slowly and is easily available is JETEX fuel in pellets. It would have to be dissolved, spiked and recast. I have no way of calculating the length-to diameter ratio of the propellant grain, or the nozzle dimensions until I discover the specs of the pellets. In any case, for a reliable "zero-length" launch I recommend that a powerful booster (or several, depending on what's available) be placed so that they thrust down instead of straight back, and their thrust lines go through the c.g.. This will 'levitate' the missile and start it moving forward but without pointing the nose up. This allows the operator to acquire the missile without having to feed in a large correction, and reduces the possibility of a crash-dive through operator error or a stall when the booster(s) burn(s)-out,(see figure 2). The sustainer should be fired when the boosters are.

If you publish my letter I will assume that you are interested and will let you know when (and if) I am able to design a sustainer. If this letter seems too critical, let me assure you that I have the highest respect for anyone willing to undertake such an ambitious project.

A few second thoughts about the guidance system; digital proportional gear is expensive and unnecessary for one-time use. To reduce expense and the weight of the on-board equipment, I suggest using either an escapement or a reed system, and dry-cells instead of nicads. However, one dummy 'trainer' should be built with rechargeable cells. It should be weighted and balanced just like the live rounds and fired at cloth silhouettes draped over bales of hay or other targets from which the practice round could be recovered without damage. Prospective 'crewmen' should get plenty of practice under conditions as realistic as possible, since firing a guided missile requires some skill.

References: Jane's Weapon Systems
Brimley, Rocket Manual for Amateurs
Brimley, Advanced Radio Control

Sincerely, Francois

P.S.,

I would like to point out that the term "SAM" stand for Surface-to-Air-Missile. The soviet wire-guided AT missile is called SAGGER, and does not cost $1000/unit! God help us all when the terrs get SAM's!

Dear Francois,

Yes, I'd like to see the sustainer when completed. Thanks for your unique insight into missiles. Although lengthy, my missile article admittedly lacks a great deal. How do you other readers feel about this type of weapon? We would like to purchase your missile design info or articles. Clyde

PLEASE NOTE: I don't even want to see government material that is currently classified as secret/restricted/national security, etc.

M10·M11 Suppressor

By Clyde Barrow

Background Info:

The Sionic Sound Suppressor System was designed by Mitchell Werbell at Military Armament Corp. (MAC)in 1970. The system is named for Werbell's previous corporate venture, Sionics Inc., an acronym for Studies In Operational Negation of Insurgency and Countersubversion.

RPB has recently been sold. The current owners now produce both guns and suppressors to original MAC/Sionic specifications. They have also arranged to rename the company Sionics Inc. Insurgents and countersubversives take notice,Sionic/MAC is back.

General Description:

The M-10/M-11 silencers are machined entirely from T6 #6061 Aluminum tubing and round stock. The only non aluminum pieces are the two polyurethane baffles in the replaceable endwipe assemblies (see PMA Vol. 1 #4).

The silencer consists of three sections; a rear expansion chamber, a front diffusion chamber and the removable end wipe assembly. NOTE: Please refer to the exploded parts drawings for the following.

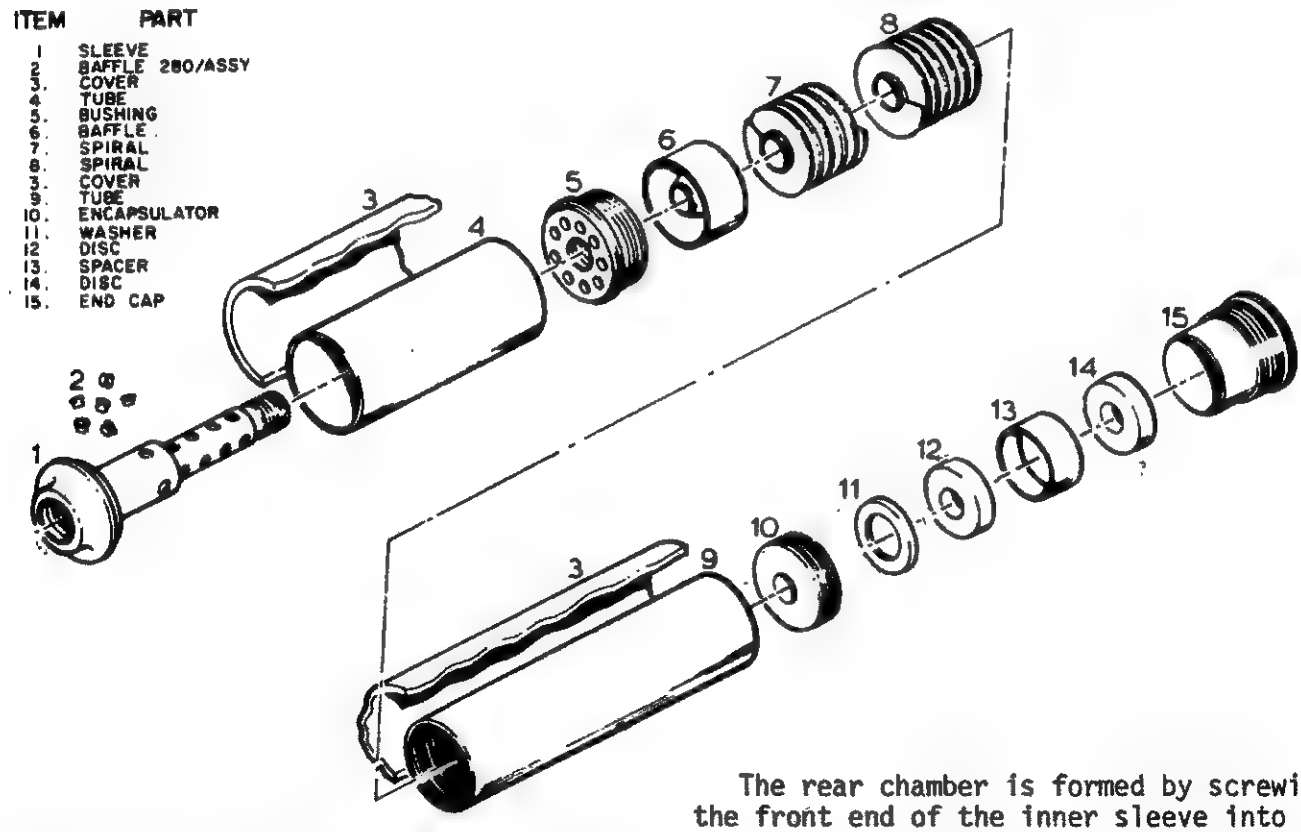

These suppressors were designed and produced to be used in conjunction with the M-10 submachine gun and the M-11 mini-machine pistol, designed by Gordon Ingram. (See PMA Vol.1-Ingram SMG patents). MAC built and marketed these guns and suppressors until the company was dissolved in 1975.

In 1977, RPB Industries began production of the Ingram SMG's, but not the Sionic suppressor. RPB sold the guns with a suppressor of their own design. This silencer was reportedly inferior to the original Sionics unit and was discontinued.

The rear chamber is formed by screwing the front end of the inner sleeve into the bushing, capturing the rear outer tube between them. The space between the inner sleeve and outer tube is packed with aluminum eyelets. As the powder gas leaves the muzzle, it bleeds through holes drilled along the inner sleeve and passes into the rear chamber. The eyelets reduce gas volume by heat absorption and slow the release of the remaining gas with a baffling action.

The front chamber consists of the front outer tube, closed at the rear by the threaded bushing and at the front by a threaded disc (encapsulator). A cone shaped

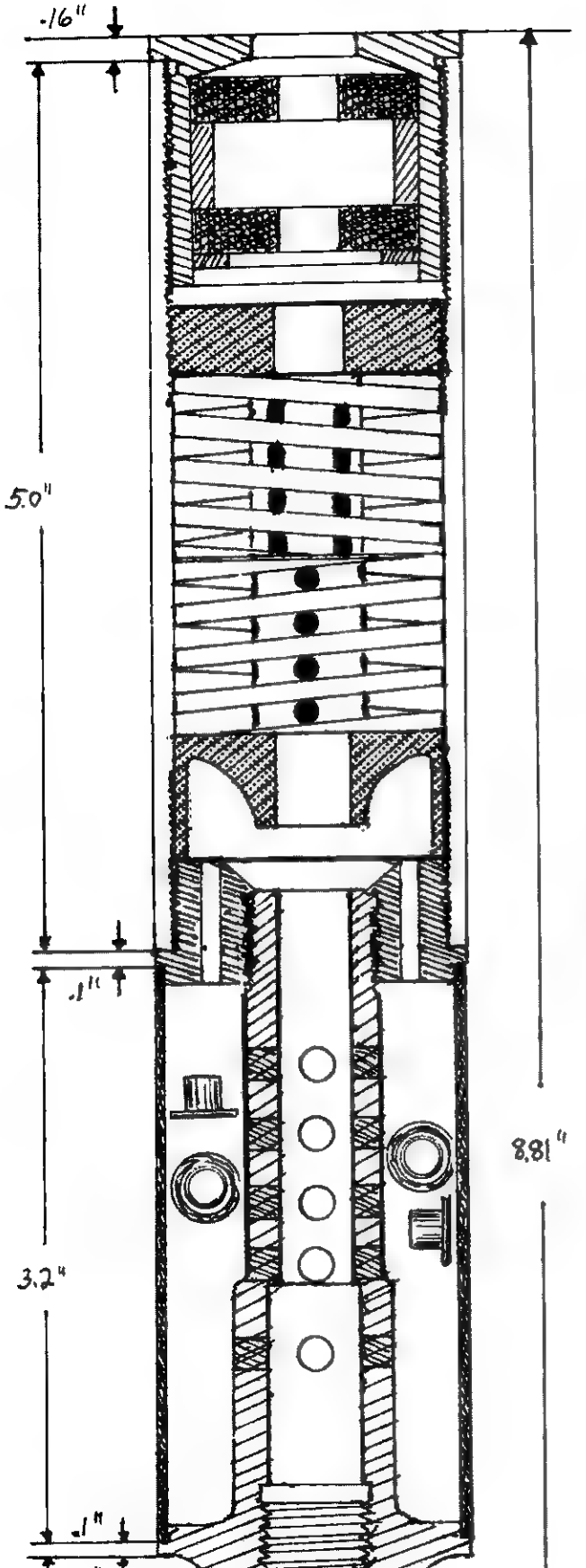

M11 sound suppressor assembled

baffle and two "spiral" diffusors are contained in this section. The gas from the rear chamber passes through holes in the threaded bushing and contacts the cone shaped baffle. The swirling motion created by the baffle delays the passage of gas into the spiral area. The two spirals, one with a left hand and one with a right hand twist, spin the gas Maxim style. Centrifugal force causes the spinning gases to move towards the outer edge of the spiral tube. The result of all of these dissimilar movements is a reverberation effect that dissipates, cools, and slows the release of gas from the front chamber into the endwipe assembly. The bullet's restricted passage through the undersized endwipe baffles further slows the release of gas into the atmosphere.

SUPPRESSOR
MIO 9MM PARA. &
45ACP

If the above is a bit vague, I'm sorry. The remainder of this issue could be filled with info on the precursor wave, sound pulse curve,harmonics, blow by, pressure differentials, etc. I don't claim to understand all of that any more than you do. I do know that I've never heard anyone down grade Werbell's basic design which is accepted as better than any of its predecessors. I know of no recent designs that can equal or better the Sionic's performance.

Individual Parts Specs:
Refer to exploded parts view for reference.
Part #1-Inner Sleeve

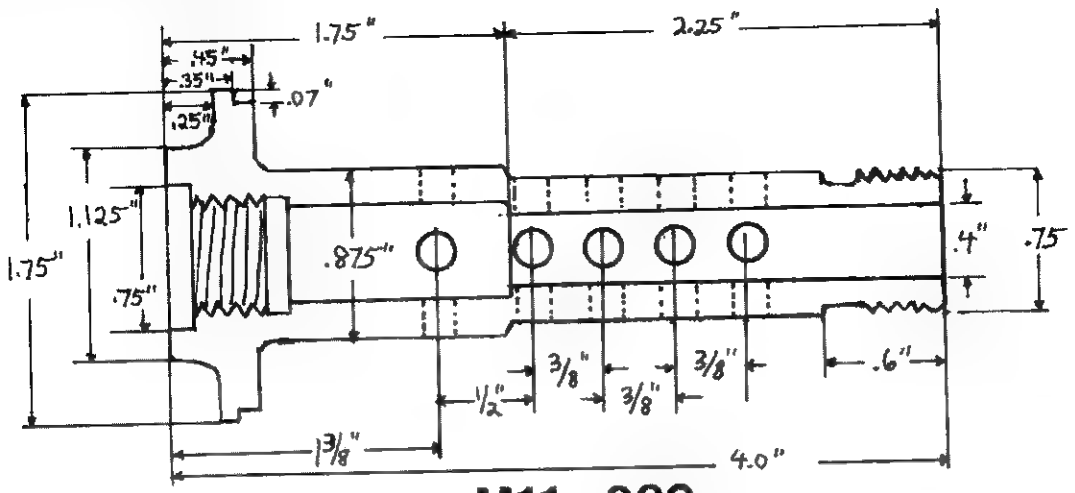

M11-.380

Each caliber gun has its own sleeve, threaded to screw onto that model gun barrel only. This prevents destroying a 9mm unit by installing it on a 45 cal gun or rupturing an M-11 380 suppressor with the more powerful 9mm para round fired from the M-10.

Individual barrel thread sizes are as follows:
M 10/45 - 7/8" NC - 9TPI (threads per inch)
M 10/9mm - 3/4" NC - 10 TPI
M 11/380 ACP - 5/8" NC - 11 TPI
Each sleeve is also counter bored for barrel clearance as follows:
M 10/45 - 11/16" x 2" deep
M 10/9mm - 9/16" x 2" deep
M 11/380 ACP - ½" x 1 3/4" deep

The rear of each sleeve carries a recessed, flat face that contacts a corresponding shoulder on the gun's barrel, automatically aligning the suppressor with the gun's bore. The front ends of all three model sleeves are threaded 3/4" x 16 TPI (NF).

The rear of the M-10 sleeves are 2.13" OD with the shoulder cut to fit into the back of the 2" ID rear tube. The M-11 sleeve is 1.75" OD with the shoulder cut to fit into the back of the 1.62" ID rear tube. The M-10/45 sleeve is bored .5" ID. The M-10/9mm and M-11/380 versions are both bored .4" ID. All three sleeves are drilled with four rows of five 3/16" diameter holes (a total of twenty) for passage of gas into the rear chamber. See individual full size part drawings for remaining specs

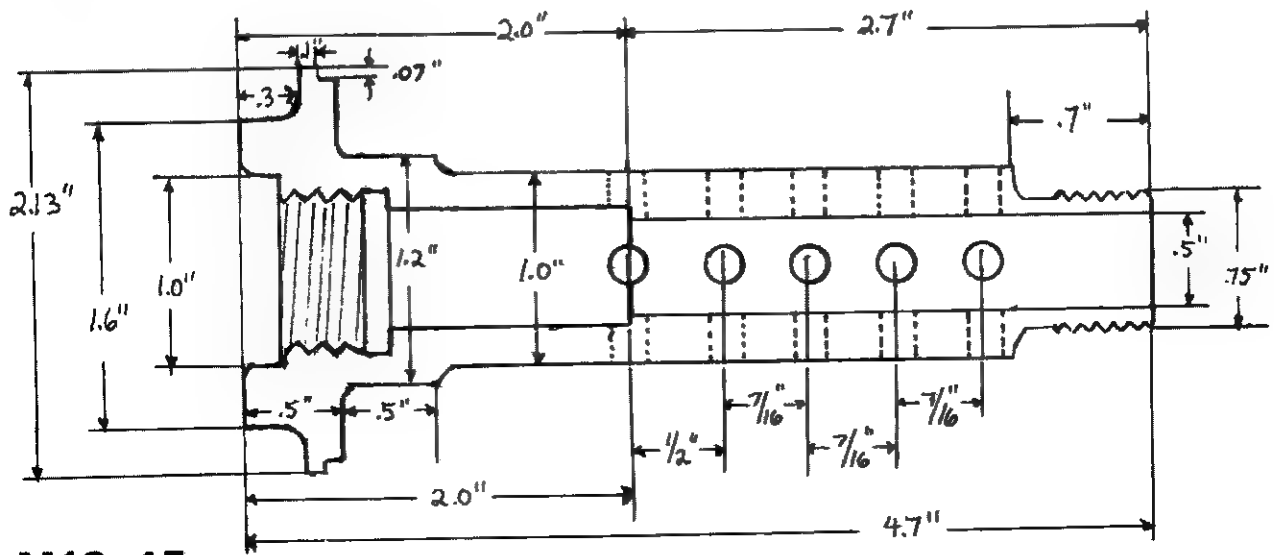

M10-45

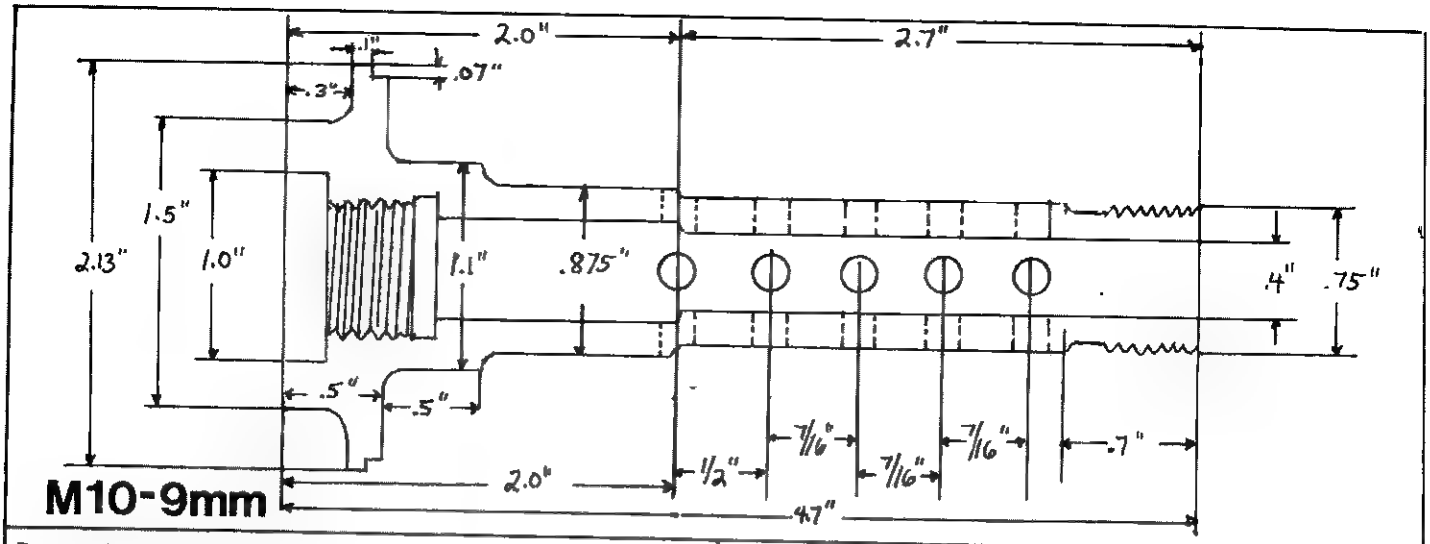

Part #2 - Baffle Assembly:

These baffles are aluminum eyelets,about pop rivet size, which are packed into the rear chamber during assembly. Original factory specs called for 280 eyelets in the M-11 suppressor and 410 in the M-10 units. This number will vary due to eyelet size, sleeve outer diameter, etc. Pack baffle assembly as tight as possible. The completed unit should not rattle if packed correctly.

Part #6 - Baffles:

Two sizes of baffles are used, both are 1.5" OD x.7" long. The baffle for both the M-11 and M-10/9mm is bored to .4" ID to allow clearance for the .355" diameter bullet. The 45 caliber version is bored to .5" ID.

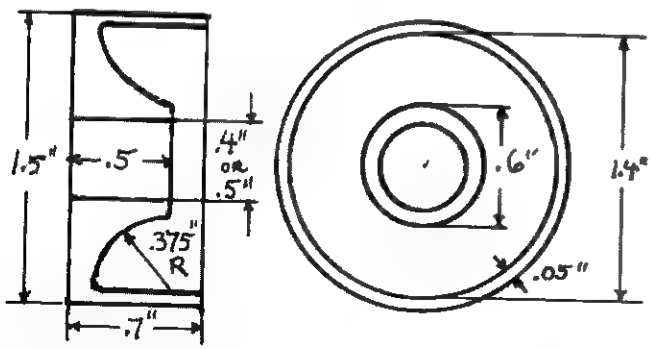

Part #3 - Cover:

This assembly is a removable heat resistant cover made of Nomex firesuit material. In addition to protecting the firer's hand from heat, the cover dampens the resonanting or 'ringing' within the silencer during firing. Spring clasp holds the cover in place.

Part #10 - Encapsulator

Each encapsulator is a .4" thick disc, 1 9/16" OD x 20 TPI. The 9mm/380 version is bored to .4" ID and the 45 version to .5" ID. Each encapsulator is drilled to allow installation and removal by spanner wrench.

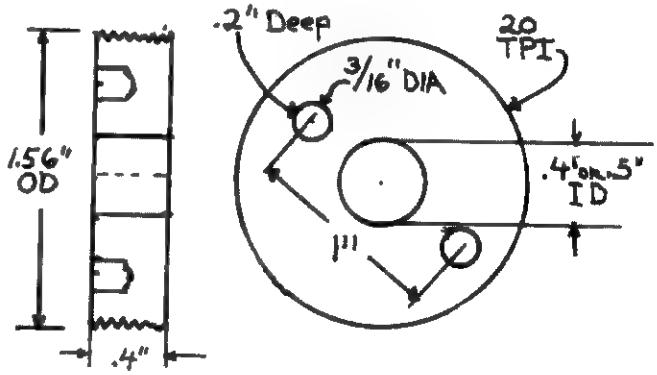

Drill two holes, 3/16" diameter, 1" apart as shown. Install encapsulator at 25 ft/lbs torque.

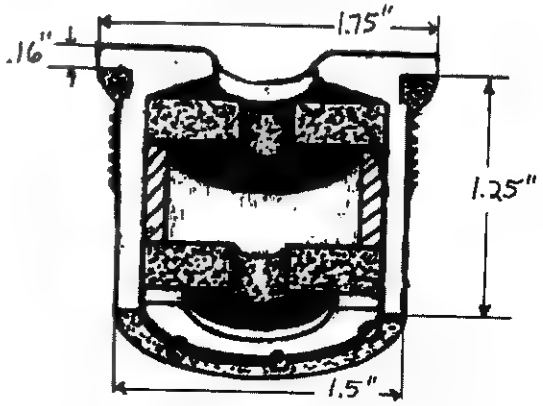

Parts #11-15 - Endwipe Assembly:

These units are described in PMA Vol.1 #4, page 55.

Part #5 - Threaded/Vented Bushing

All three bushings are .7" thick with center holes threaded 3/4" x 16 TPI to fit the fronts of the inner sleeves. The front shoulders of all three bushings are 1 9/16" OD x 20 TPI to accept the threaded front tubes. The OD and shoulder cuts for both bushings are the same as their counterpart in parts #1. Each bushing has a series of 3/16" diameter holes to allow movement of gas from the rear to the front chambers. See drawings for specific hole pattern.

M11

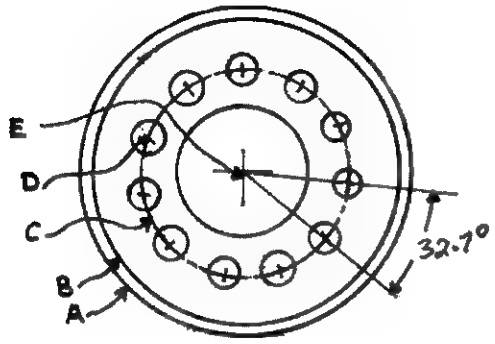

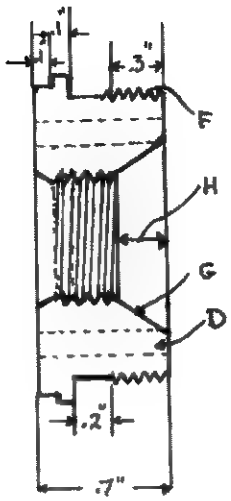

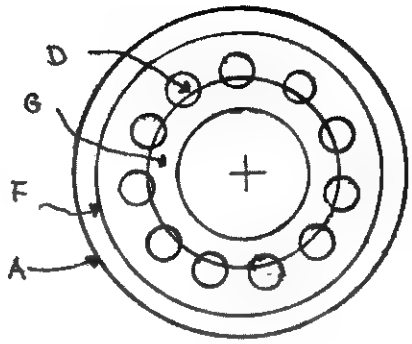

M 11 BUSHING SPECS
A. 1.75" OD x .1" long
B. Shoulder 1.62" OD x .1" long
C. 1.0625" DIA circle
D. 11 Holes / .1875 DIA

E. Centerhole 11/16" ID (3/4" x 16 TPI)
F. 1.56" OD x .3" long (1 9/16" x 20 TPI)
G. Taper 1/16" inside to 1" outside
H. Tapered area .25" deep
I. 1.5" OD x .2" long

M10

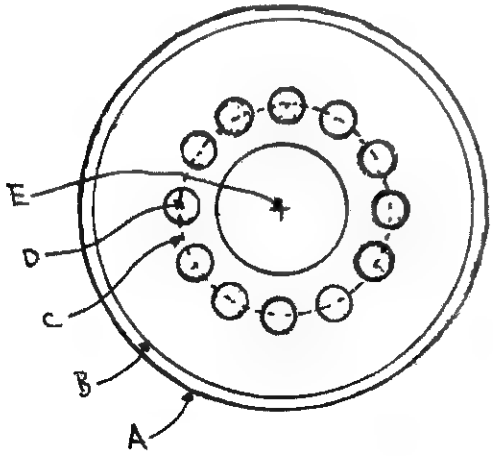

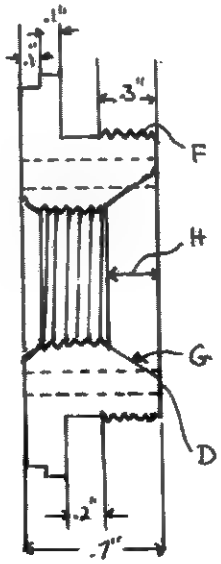

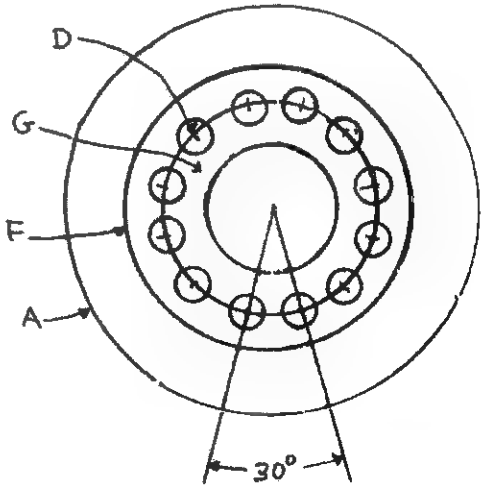

M 10 BUSHING SPECS
A. 2.13" OD x .1" long
B. Shoulder 2" OD x .1" long
C. 1.125" DIA Circle
D. 12 Holes/.1875" DIA

E. Centerhole 11/16" ID (3/4 " x 16 TPI)
F. 1.56" OD x .3" long (1 9/16" x 20 TPI)
G. Taper 1/16" inside to 1" outside
H. Tapered area .25" deep
I. 1.5" OD x .2" long

Parts #7 & 8 - Spirals

The spiral baffles are 1.5" OD x 2" long in the M-10 models and 1.5" OD x 1" long for the M-11. Each suppressor uses one left and one right hand twist "spiral". These units are actually helical,as there is no taper along their length.The fins are cut to a depth of .4375" leaving a .625" OD core section. There are four fins per inch, with a .125" space between fins. Four rows of 1/8" diameter holes are drilled in the spaces between the fins. M-10/9mm and M-11 spirals are bored .4" ID. The M-10/45 units are bored to .5" ID.

The preferred method for cutting the helical baffles is to use a milling machine with an indexing head and a 1/8" thick disc cutter. The tangent table angle is set to 87° for proper cutter clearance. Depth of cut is set to .4375". Spiral pitch is .25" (one turn in .25"). Gear change (velocity ratio) is 1/40 for machines with a standard pitch of 10 inches. For other machines, use the following formula:

$$\text{velocity ratio} = \frac{\text{pitch of helix}}{\text{lead of machine}}$$

example:(standard machine) $\frac{.25}{10} = 1/40$

These units can also be cut by hand. The 1.5" OD round stock should be held in a padded vise during the cutting procedure to avoid damaging the delicate fins.

1. Wrap the 1.5" OD round stock with ¼" wide masking tape or better yet, two side by side strips of 1/8" automotive pin striping tape. Start the tape at an angle of 87° as shown (figure one).

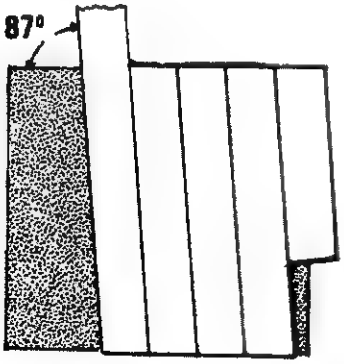

fig1

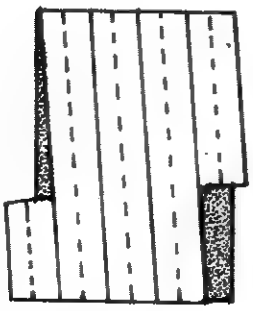
fig2

2. Mark along the center of the ¼" wide tape and cut with a razor blade.(fig.two)

3. Remove one of the continuous 1/8" wide strips. (figure three)

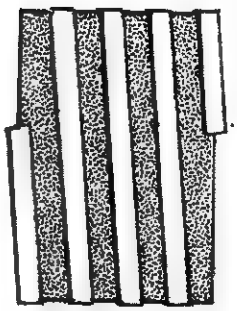
fig 3

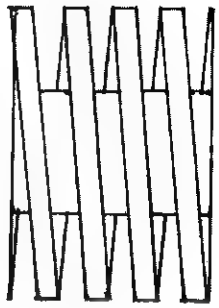
fig 4

4. Centerpunch and drill a series of 1/8" diameter holes along the entire length of exposed metal. Install a stop on the drill bit to limit hole depth to .4375".

Use a file, Dremel tool or hacksaw to remove the remaining metal between fins. If a hacksaw is used, extend the length of the mount pins and install five blades on the frame. This should cut the correct width slot in one pass. Hacksaw blades are .5" high, so epoxy a .0625" wide strip along the side of the top edge to limit the depth of the cut to .4375". If a miter box is available, set angle to 87°

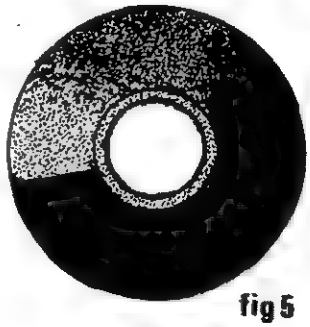
fig 5

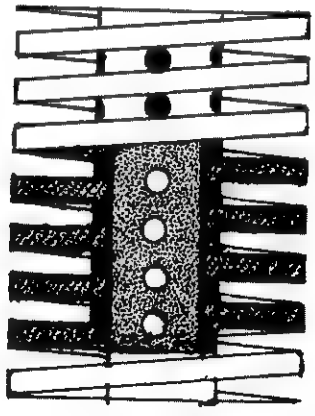

5. Drill 1/8" diameter vent holes and bore the centers as indicated.(fig.five)

If you lack the experience and tools to generate a helix as shown, you have two options. Farm out the job to a local machine shop, or use a substitute spiral unit. Two examples are found in the AR-7 silencer in PMA Vol.1 and the De Lisle Carbine detailed in this issue.

Part #4 - Rear Tube

Material is .065" wall aluminum tubing

The tube for both models of the M-10 is 2" ID, 2.13" OD and 3.8" long. The M-11 tube is 1.62" ID, 1.75" OD and 3.2" long.

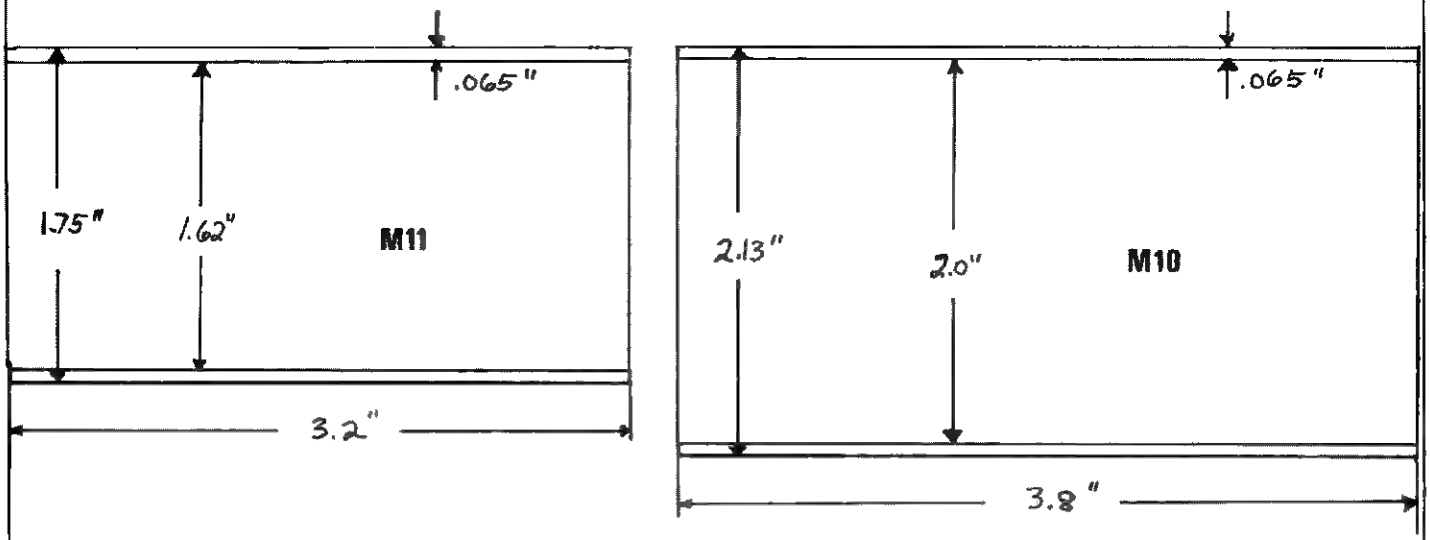

Part #9 - Front Tube

Both M-10 front tubes are 7" long. The length of the M-11 version is 5". All three tubes are 1.74" OD, 1.50" ID. Wall thickness is .120". The tubes are threaded 1 9/16" x 20 TPI. Threads extend one inch into the rear and two inches into the front of all front tubes.

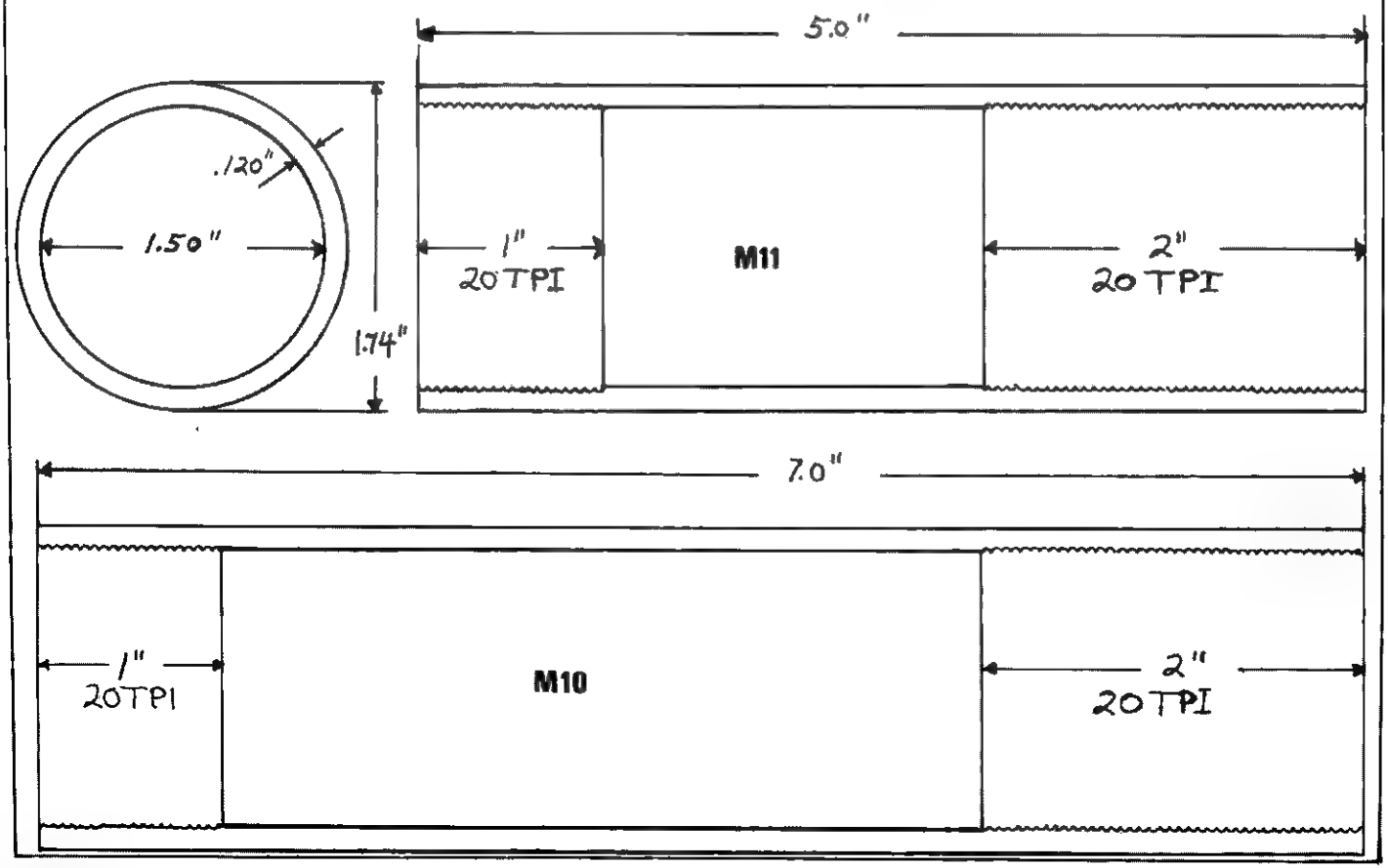

If you are unable to obtain the tubing needed for parts #4 and #9, substitute pieces can be made as follows. 1/64" thick sheet aluminum is sold at most hardware and building supply stores. Sheets are 36" x 36" and are priced at about $8.

1. Cut strips as wide as the length of tube needed.
2. Roll the strip into a tube of the correct ID and wall thickness and cut off excess length.
3. Hold rolled tube in position with masking tape or hose clamps. Test fit internal parts to check for correct tube ID.
4. Drill and pop rivet the tube. The row of rivets should begin about ¼" from each end.
5. Flatten the rivets as outlined in Takedown Rocket Launcher (PMA Vol.1pg119). When making front tubes, the ID should be 1 9/16", which will allow the threaded bushing, encapsulator and endwipe to slip into the tube. After peening the pop rivets flat, a liner is made to contain the baffle and two spirals. The liner must be cut to clear the rivets that protrude into the interior of the tube.

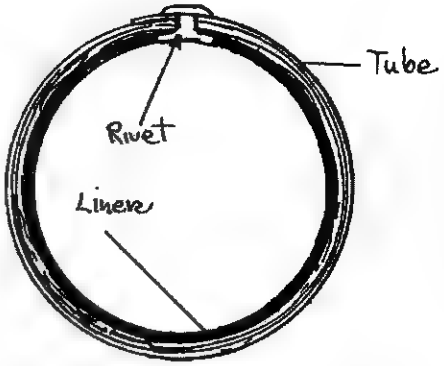

6. Assemble the suppressor using set screws as outlined in the following section. (disregard step one-use steps 2 through 4 only).

Alternative to threading the inside of the front tube:

If you are unable to thread the front tube (1 9/16" x 20 TPI), the following method may be substituted.

1. Turn or hand file the front shoulder of the bushing, the outside of the encapsulator and the threaded portion of the end wipe to allow these pieces to slip into the 1.5" ID front tube.

2. Lathe turn or handfile a 1/16" deep groove around each of the three parts as shown. (figure one) Groove width should correspond to set screws diameter. The use of grooves eliminates the need to line up specific holes.

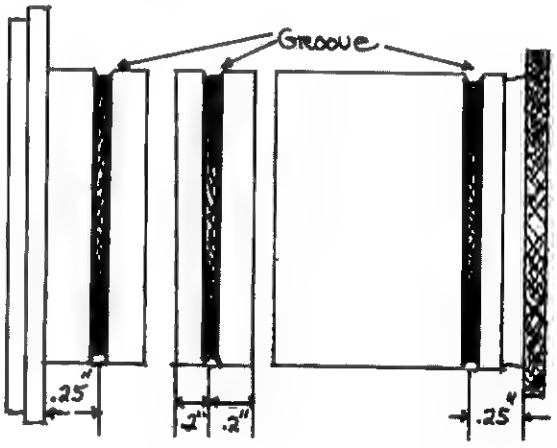

Fig.1

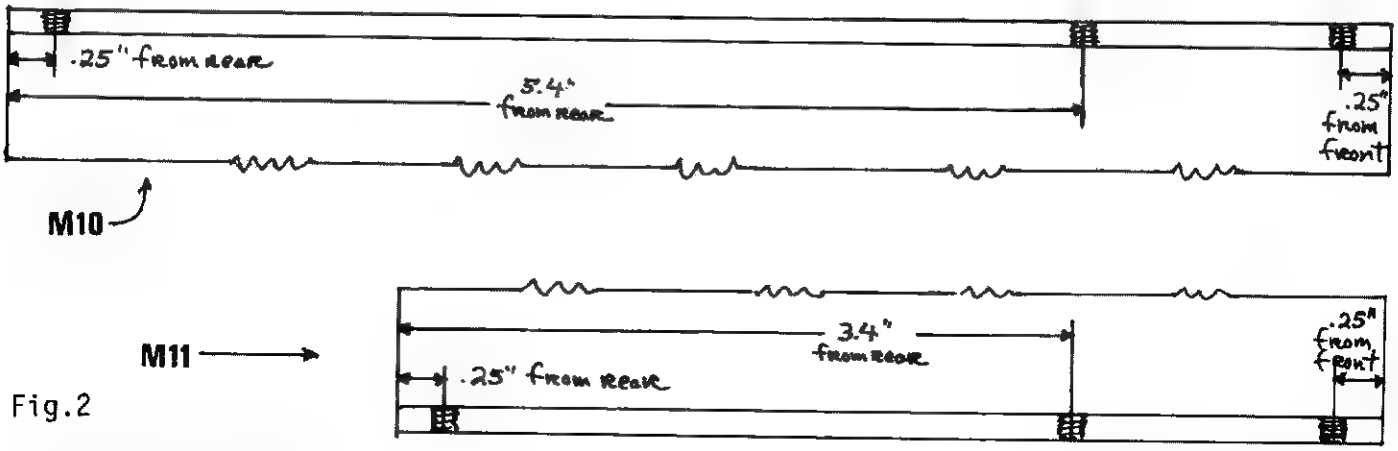

Fig.2

3. Drill and tap the front tube for two allen set screws each at the three points indicated (six screws total)(figure two).

4. Assemble the suppressor, apply locktite to the screws, and tighten them into the grooves.

INTRO - Continued from Page 1

To avoid repetition, many Volume Two articles will refer to information or procedures presented in PMA Volume One. We also suggest that you obtain copies of; The Poor Man's James Bond by Kurt Saxon, How To Kill (Volumes 1&2) by John Minnery, and The Submachine Gun by Bill Holmes. These books are master works on the subject of improvised weaponry and the authors are the best in the business.

BONNIE AND CLYDE IN 1933

Feature articles in Volume Two include the following:

- Building a press setup for sheetmetal stamping and forming small parts.
- Metal casting with the new cavityless mold process. This method is faster, cheaper, and far easier than traditional patternmaking/moldmaking processes.
- Homemade vehicle armor and "bulletproof glass" using clear lexan plastic sheets, kevlar fabric and fiberglass reinforced ceramic panels that are fired in a standard pottery kiln.
- A number of modifications for the Ruger Mini 14, including a folding stock, vented handguard, barrel threading for flashhider/silencer mounting & complete silencer construction plans. The material in this section can be modified for use on other similar rifles.
- Detailed specs for duplicating the Sionic silencer. Originally designed for the M-10/M-11 SMG, this design can be adapted for use on any .380, 9mm, or 45 caliber weapon.
- Complete construction plans for building a 60mm mortar/launcher, including baseplate, bipod with transverse and elevation adjustments and 60mm mortar bombs.
- Silent antitank weapon based on the new German Armbrust launcher, currently being considered by several NATO countries, including the US. All flash, smoke and noise is contained within the launch tube and both backblast and recoil are eliminated.

PMA is a specialized magazine dealing with material unique in the field of weapons publications. Our small staff strives to provide you with useful information not available from conventional sources. This research is often quite difficult and may result in production delays.

QUARTERLY ISSUES ARE SCHEDULED TO BE MAILED DURING THE 1ST WEEK OF; JANUARY, APRIL, JULY AND OCTOBER 1979.

If an issue is late, we hope you find the results to be worth the wait. Thanks for reading PMA.

VOLUME 2 NO.2

Published By
THE POOR MAN'S ARMORER
P.O. BOX 586, EUREKA, CAL. 95501

©Copyright 1979

The Only Magazine Of Improvised Weaponry

Compiled and Edited By
Bonnie&Clyde Barrow

TERRORISTS MAY BUY ARMS LIKE THESE ON OPEN MARKET IN LIEGE, BELGIUM

GUN MARKET Want to buy a rifle, a machine gun, a bazooka--no questions asked? One of the best places is the Sunday flea market at Liège on the Belgian-German border.

Each Sunday hundreds of buyers, many of them undoubtedly terrorists, inspect a variety of weaponry, much of it from World War II, which is placed on sale in Liège by local merchants.

German, Italian, and French authorities have warned against such display of guns and unrestricted sales, but the Belgian police seem to turn a deaf ear to the complaints. In Liège there is no law that prevents people from buying as many weapons as they want. No one seems to care whether the buyer is a member of the Baader-Meinhof Gang in Germany, the Red Brigades in Italy, or the IRA in Ireland.

PLEASE NOTE
Statement of Policy

We at the Poor Man's Armorer Magazine research, write, buy and sell information only. We do not buy, sell or manufacture weapons. All info in PMA is legal to possess, print, sell and send through the US mails.

All data is obtained from sources believed to be correct. The accuracy of any and all of the material in PMA cannot be guaranteed.

If you plan to build weapons, you should obtain copies of federal, state, and local weapons laws from the appropriate agencies, the local library or your attorney.

It is the sole responsibility of the reader to determine legality before building.

The Poor Man's Armorer Magazine and all contributors will not be responsible for any injuries or property damage that may result from the use of information or ideas found in PMA.

Letters to the Editor

We appreciate the letters and comments submitted by readers but we are unable to answer individual letters. Questions of general interest will be answered in articles or the letter column.

Dear Clyde,

In PMA Vol.2 No.1 you asked for a prescription how to improvise electric blasting caps.

Here is one. It is from Col. Grivas Dighenis (who fought the Britains at Cyprus).

Please excuse my bad English and be careful when you prepare the stuff.

How to improvise electric blasting caps:

How to nitrate mercury:

1. Take a bottle with 1000 cm^3 concentrated, pure nitric acid (spec.weight 1,42). Pour 120 gramms pure mercury into the acid and let it rest for 12 hours. Don't put a stopper on the bottle. After

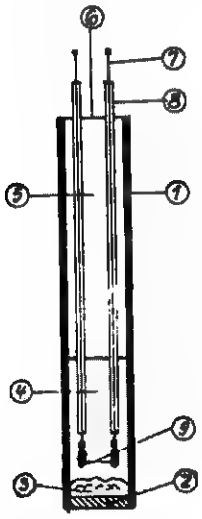

1. copperpipe
2. end (soldered)
3. cotton wool
4. mercury,must be nitrated (Knallquecksilber)
5. cotton wool
6. tape
7. electric contacts
8. insulation
9. thin wire (like that in a bulb)

12 hours put a stopper on it and turn it (acid and mercury shall mix). After some time take the stopper away, because there might be some fumes. Then close the bottle again.

2. Take a big bottle with a large opening with 1280 grams of 95% (pure) alcohol. Pour the mixture of nitric acid and mercury in this bottle. Don't close it.After a short time toxic fumes will escape.When this stops the nitrated mercury will lay on the ground of the bottle. It must be washed with destillated water and dried in the sun on a glassplate.

A German

Dear Bonnie & Clyde,

Received Vol.2 No.1, this date. It's great. I hope you reprint Vol.1 in the same manner on the same paper. It would be great for keeping in a binder,and worth rebuying.

Here are a few items that have proved useful in the past:

1. A 6 ft. car radio antenna, remove little ball on end, and sharpen. It will close down to approx. 6 in., and can be carried almost anywhere. When needed it is opened and used as a whip. It will slash a person to pieces.
2. A plastic letter opener, which is pointed & sharpened. It can be carried readily past metal detectors with no problems.
3. Is a pair of 8 oz. steel ball bearings. I carry one in each side coat pocket.If asked they are used to exercise my hands. They can be used one in each hand to build-up the fist, or they can be thrown and at 10 ft. they will stop a man if thrown at the stomach. Another way is to hold them in the palms of the hands and slap the other person in the face.
4. This is awkward to carry but in an overcoat pocket not noticeable. I welded 4 salmon hooks together,so they face in 4 directions. They are attached to a heavy cord with a stick at the end. It is used as a "grabber". The "grabber" is carried in a plastic bottle which the top is cut off. When needed the stick is held in the hand so the cord is between the 2nd & 3rd finger, the "grabber" is swung to the other person's shoulder or arm-pit and held taut. The other person is unable to get away and is in pain, with my free hand I can use a steel ball-bearing or another helper to subdue the other person.
5. Is a simple, legal 18" steel edge ruler, which is carried in a binder and used as a sabre.
6. Is an envelope which has a piece of flat steel inside with all 4 edges sharpened. It can be carried in a shirt pocket or coat pocket. It is used in the hand striking with the corners or thrown like a shirkin and is deadly.

If you are interested there is more. Well that's it for now. Yours,

The Preacher

Letters to the Editor

Dear Sir,

Enclosed is payment for a Volume Two subscription. Mine will come via diplomatic pouch. If the local government knew I had such a magazine here, I would be thrown out muy pronto, or in the venacular, Jaldi-Jaldi!

I need the design for a simple crossbow, to shoot pigs, not the motorcycle kind, real ones, I have about 100,000 to kill. They are wild, breeding like hell, and being a muslim country, no one will touch them. We are under martial law and no one can get shotgun ammo to kill them, this government doesn't trust anyone.

The ultimate do-it-yourself weapons making is done in this country. In the tribal areas near Peshwan, town called Darra, they can make any weapon you want, by hand. Sten guns, lugers, Armalites, Mausers, cane, pen, stick pistols, you name it--they can make it if you give them one to copy. Their metal is from truck axles, gears, springs. Get a copy of the National Geographic Mag. for Jan. 1977, it's in there.

I could probably make a fortune selling your mag. to the local opposition party, but I wouldn't last long--And the "Crash of 79" seems damn close here.

kuda-hafez
WRS
Pakistan

Clyde,

A few things from an unreliable source that could be useful if they prove true:

1. A nerve toxin from 'lilies-of-the-valley' flowers. Cover them with vodka and heat on a burner. Strain off the liquid and simmer what's left to a thick paste. 'What's left' is supposed to be quick and fatal.

2. Sodium cyanide gas from mountain laurel (kalmia latifolia). You put some in a glass jar and set it out in the sun for the day. Then you throw out the laurel and recap the jar real quick. What's left is straight sodium cyanide gas.

3. Dichlorovinyl dimethyl phosphate-DVDP. Shell No-Pest Strips dissolved in paint thinner. Apparently this involves simply immersing them until they disintegrate. The resulting solution is evaporated until only 'a thin, oily sludge' remains. This the DVDP, which supposedly results in very rapid death when sprayed into the face. Sorry, but I have no more specific data on the preparation.

4. Fiberglass insulation ripped into long, spiky strands, together with small chunks of polystyrene foam, soaked in sulfuric acid (probably concentrated, not specified). Dried in the sun, and used for area denial. Severe burns on contact.

5. Potassium chlorate-Vaseline field expedient explosive, dried in the sun, and used as mines for area denial, etc. No trigger mechanism; explodes when stepped on (?). May be packaged in thin plastic bags. Unsure if charge is to be removed from packaging before emplacement.

6. Boobytrapped phonograph record. Potassium chlorate vaseline field expedient explosive placed in record grooves. Detonated by friction of phonograph needle. Is this feasible and practical, or a pipe dream?

Again, if these methods are feasible, and not simply bullshit, their usefulness is obvious. However, I cannot vouch for their veracity. Good Luck.

a reader

Dear Clyde,

I have just received my first issue of PMA and I must say I find it absolutely fantastic. In regards to that letter from E.L. about extracting snake venom. There are several ways for extraction but this way is by far the easiest.

1. Make ready a glass, cover the top in thin clear cellophane held on snugly by a rubber band.

2. Get a snake, preferably a poisonous one.

3. Hold the snake by the side of its head, just behind the jaws. This will force the snake's mouth to automatically open with fangs extended.

4. Push the snake's fangs through the cellophane and press against the inside of the glass. You can then watch the venom pour down the sides of the glass.

This is called "milking the snake", and is by far the easiest way to do it. I would not suggest using this method on cobras, though, because the slightest little scratch can wipe you out. I would suggest a nice little rattlesnake or coral snake. Just figured I'd let you know.

Tonto
Ontario Canada

Letters to the Editor

Dear Bonnie & Clyde,

Please send me another bound edition of Volume One of PMA. My last volume was part of the loot taken from my office which was burglarized recently. It's the only thing I really miss.

RE: Letters to the editor about fully auto S.G. Proper alteration of the hammer of a Rem. Model 11 will do it. It's a fearsome thing to shoot and I would recommend a vertical forward grip be added!

Doc

Dear Bonnie & Clyde,

Here's information other readers have asked for and some they havn't!

Impro Blasting Caps: The best thing to tell you is to look at the Improvised Munitions Black Books sold by many book dealers. There are 2 volumes and together they tell how to manufacture a blasting cap stronger than a military cap (or so the book says; would the government lie?) These can then be made into electrical caps by joining a small lightbulb to the cap; a little work may be necessary to figure out the best way to do this, as the cap is a cartridge case. It would have been nice Clyde, if you had printed this version instead of the cut down TM# 31-210.(You still could print the parts you left out!)

Send $2.00 to: D & E Magazines Manufacturing, P.O.Box 4579 "B", Downey,CA 90241. You will get their current price list of magazines which includes extended mags for the AR-7 and Remington 742. I can't vouch for their quality, but they do have the extended mags someone asked for.

I don't know of any magazine (clip).22 magnums made in America. There are two that are made in Germany, the Heckler & Koch Model 300, with up to a 15 shot magazine and the Erma M-1 Style Carbine with 12 shots. Check the Shotgun News for these.

Send $1.00 to Choate Machine and Tool Co., Box 218, Bald Knob, ARK 72010. These folks sell firearms accessories which I've heard rave reviews over. They sell the best made shotgun magazine extensions folding stocks for shotguns and some rifles, flash hiders, x-tra long nylon slings, and they also convert Garands (M1) to .308 and so they can use M14/M1A magazines.

All you shotgunners who string sinkers for loads, don't use wire! Use fishing line instead. Whoever said fishin' and shootin' don't mix? This isn't grapeshot by the way; grapeshot was shot from cannons in the Civil War, but it referred to the size of the lead balls.

I see that the Bushmaster is now available in a rifle/folding stock version

Sarco Inc. (see the Shotgun News)always has interesting stuff. They sell infrared sniperscopes for $495.00 (geez, think I'll buy a couple) and they sell bazooka slings for $3.00, new. All you rocket launcher fanciers might check out the Edmund Scientific catalog (they probably have an ad in Pop. Science). They still probably sell their bazooka sight as well as infrared sniperscopes and other infrared seeing devices.

Speaking of night seeing devices, you can build your own passive-viewing device (also known as Starlight scope, Startron, et.al),if you have the plans from: Fantastic Research, P.O.B 96568, Cleveland Ohio 44101. The plans cost $15.00, but let me warn you that building one of these honeys is expensive, so if you don't have an extra thousand laying around, forget it. The advantage of having an electric light-amplifying device is its small size. There is an ad in SOF April/79 which advertises a reconnaissance scope for $295.00. This is really a big telescope which gathers a lot of light which the naked eye can't. You can't lug it around like you might a Startron. The same issue of SOF also offers a "Poor Man's Startron". It is a scope made by Bushnell which has a little lighted dot appearing where the crosshairs meet. This would be great for night shooting.

Chuck Taylor also reviews a Single Point night sight in his column.

For a background in night-seeing devices, read the article in Popular Science, July/72.

A night-seeing scope isn't really necessary for night shooting. Power of the scope causes a dimmer image as it increases, so about a 4-power scope is good for night. For a proper discussion of the best reticles for night shooting with a

scope, buy the Counter Sniper Guide for $2.00 from one of the military book sellers. It has other good info which applies to sniping as well.

All you grenade freaks, don't overlook the fact that stick grenades are simple levers and can be thrown farther than an egg-type. Also on the subject of grenades, let me say that all of you who ridge your grenades a la U.S. pineapple are wasting your time. This doesn't cause nice, neat sectioned chunks of iron to fly about as hoped for. If you do it on the inside, then it does some good; less erratic, better dispersion of chunks; they fly out in the sections they're supposed to.

Marc Ridenour's Kiyoga is what is also known as a spring kosh. Check out a copy of Kill or Get Killed by Col. Rex Applegate for more on this.

A pipe wrapped in newspaper and used as a weapon also goes by a New York name: Shmalin.

We used to make a different version of Joe Brown's Fire Ball Cannon. Ours was hand-held. You squirt the lighter fluid into the hole at the bottom and then whip the taped together cans up and down in a stiff-arm motion as though you were going to beat the ground with it. You then take a match which is lit and hold it by the hole - BOOM! WHEE!

A simple yawara stick can be made by taking a suitable piece of dowel and putting a screw eyelet on each end.

A simple blackjack can be made by putting a bar of soap in a sock.

A word on those who would buy one of those MP-40 type folding stocks for their M-1 Carbine or Ruger 10-22 is that they are rather cheaply made. We had one that was assembled so the stock, when opened, was angled almost straight instead of down to the shoulder. They also seem a bit short when opened up and I don't like the fact that the handgrip is a part of the rest of the wood stock. To me, it seems as though the hand-grip should have a separate attachment with a lot of reinforcement so that it doesn't snap off unexpectedly in a combat/survival situation.

An old trick we armchair commandos use is to tape two loaded clips end to end with black electrical tape. This makes a 60-shot clip with 2 thirty round mags.

I see they have a 40-round magazine made by Armalite for the M-16 and AR-18. It's put out by J & G Sales (see SGNews).

I know there must be some bow-hunters out there whose state laws allow them to use poison "arrers" to take game with. The poison is powdered succinyl choline chloride which fits in a rubber and plastic pod just aft of the broadhead. When the arrow hits, the broadhead breaks the pod and dusts the wound with poison. More information from someone who knows about this would be nice to have.

For those of you who are interested in city combat, get a copy of The Mercenary's Manual, Part Two; for that matter, buy both parts one and two because they have a lot of valuable weapons info condensed and compiled in their pages. Part Two has a section on street fighting which is excellent.

Clyde, you mention that one of the primary attractions of SMG's is that they can be fired one-handed. I don't shoot anything one-handed and it is simply not conducive to accuracy to fire one-handed. I think you were hinting at the handling capabilities of the handgrip/magazine housing, but that design isn't on all SMG's and even if it were, there wouldn't be much one-handed shooting (try an aimed off hand shot using the M-10 or M-11; they weigh more than a pistol.)

I also favor the M-1/M-2 carbine as a weapon. Good used carbines can be had for under $200, as well as the Plainfield model. There are lots of accessories and parts available and it can be made selective fire. If you think the cartridge is puny and underpowered, then figure out the relative stopping power (re: Julian Hatcher) or the comparative stopping power (re: Mel Tappan, pp33-40, Survival Guns). You will find that its stopping power is not huge, but it is still a step above the 9mm parabellum cartridge and just a step below the .38 Super. The .30 carbine cartridge doesn't have the range of the 9mm, but up to 100 yards it would be a sure killer and a viable substitute for a 9mm SMG when used in the M-2 carbine. In my unqualified opinion, it is just as good as a .223 at short range and a bit cheaper to shoot just as the carbine is cheaper to buy as compared to an AR-15 or

Letters to the Editor

Mini-14. Anyone who buys a carbine:beware of the Universal carbine. They don't interchange all G.I.parts and some new ones are really a whole different action. They can't be converted like the Plainfield or G.I. carbines (though I've seen some older ones which I thought I could convert with a bit of milling to the slide).

I was surprised at what you didn't know about offensive grenades,though I see that has been cleared up.

Readers should note that any manual printed up by the U.S.Government, (TM's, FM's,etc.) can be reproduced without violation of copyright laws.

So, if you have a friend with a bit of exciting information in a manual, don't be afriad to run a copy off on some copy machine. After all, your tax dollars went to pay for the research and writing in the first place; why shouldn't you be able to use the information you paid for?

I'm glad to see that the projects lean a little more toward shop projects and away from the primitive stuff. After all, most of us have access to simple tools and machines and the more complex some of the things are, the more useful and deadly the end result is.

I loved John Minnery's article on the DeLisle Carbine. I wish you could get him to write more articles for the PMA.

I also like your new loose/leaf format (a real help to putting copies away in storage).

I wish you and Bonnie all the success your efforts deserve.

Yours truly, "Wheel Barrow"
Mich.

Clyde,

Just got back from best part of a year in oilfields of Alaska. Of the many publications and magazines I had waiting for me, I enjoyed my stack of PMA the most.

I would like to see article on making the AR-15 and H & K 91 selective fire and also a test of the "homemade starlight" scope plans being sold in Shotgun News. Thanks.

CEB
Calif.

See Night Vision Devices in this issue. A review of the Starlight scope plans will appear next issue (Vol.2#3)Ed.

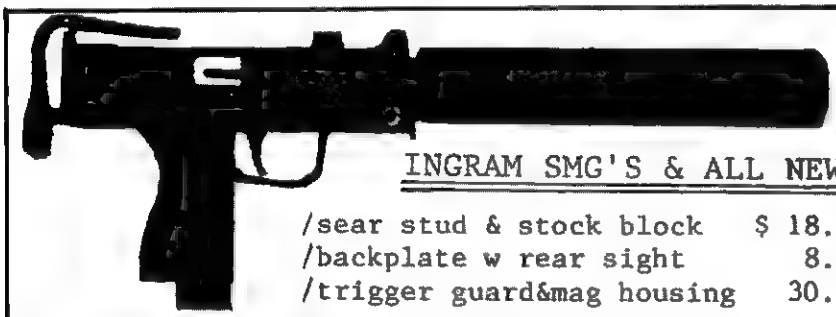

M10/M11 parts —— Anyone can buy!

Special Parts Ltd.

INGRAM SMG'S & ALL NEW SEMI-AUTO PISTOLS & CARBINES

/sear stud & stock block	$ 18.00
/backplate w rear sight	8.00
/trigger guard&mag housing	30.00

1. Ingram M10 .45 gun parts pack. . . . **$150.00 prepaid** or **$160.00** COD
2. Ingram M10 9MM gun parts pack . . **$170.00 prepaid** or **$180.00** COD
3. Ingram M11 .380 gun parts pack. . . **$180.00 prepaid** or **$190.00** COD
5. M11 .380 Silencer Parts Pack . . **$115.00 prepaid** or **$125.00** COD
6. M10 9MM Silencer parts pack . . . . **$115.00 prepaid** or **$125.00** COD
7. M10 .45 Silencer parts pack. . . **$115.00 prepaid** or **$125.00** COD

10. Alternate Stock (flat butt) M10	25.00
11. Barrel Extensions (threaded)	36.00
14. Upper Receiver w/carbine barrel (M10)	168.00
17. Sear Pin (semi-automatic only)	10.00

NOTE: Prepaid orders by Cashier's check or postal Money order only!
On COD the customer pays for shipping and insurance.

EACH SMG PARTS PACK CONTAINS:
manual,used mag.,assembled bolt, stock & upper receiver assemblies,trigger guard,mag.housing, sear stud & stock block.

ALL SILENCER PACKS CONTAIN:
manual, new wipe assembly, spirals & baffles.
YOU GET EVERYTHING EXCEPT THE LOWER RECEIVER & THE 2 SILENCER TUBES.

Special Parts Ltd.
PO Box 7652 pma
Atlanta,GA. 30357

SEND A STAMPED, SELF-ADDRESSED ENVELOPE FOR FREE PRICE LIST.

42 **NOTE: ALL** Demilled Lower Receivers are SMG (Selective Fire) With Sear Pin Holes. **(SPECIFY CALIBER)** . . . . . **$ 30.00**

If you buy a silencer parts pack with a gun parts pack - You may deduct **$10.00** and/or if you buy a demilled SMG Lower Receiver with a gun parts pack (which normally costs $30.00) you may deduct **$10.00.**

AR-7 NITESCOPE

BY M. OHNO

Sure! If you have one to two grand to plunk down on a Starlight scope or an infra-red scope (illegal in NYC and CAL). Happily there is a poor man's way to add night capability to the AR-7 system, and while it won't increase what you can see at night, it will let you hit anything you can see, which isn't bad for under $40. The

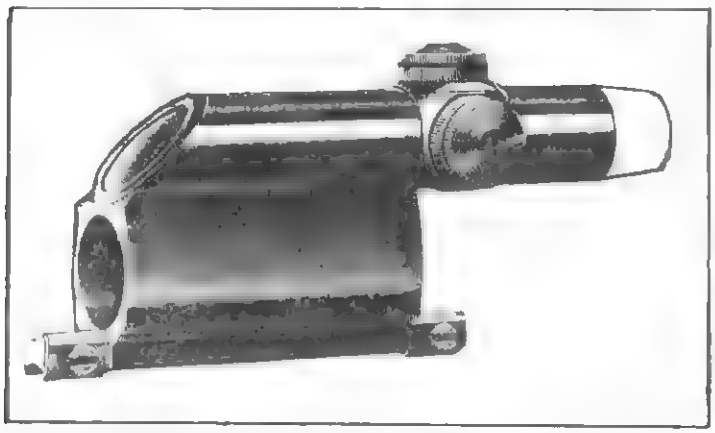

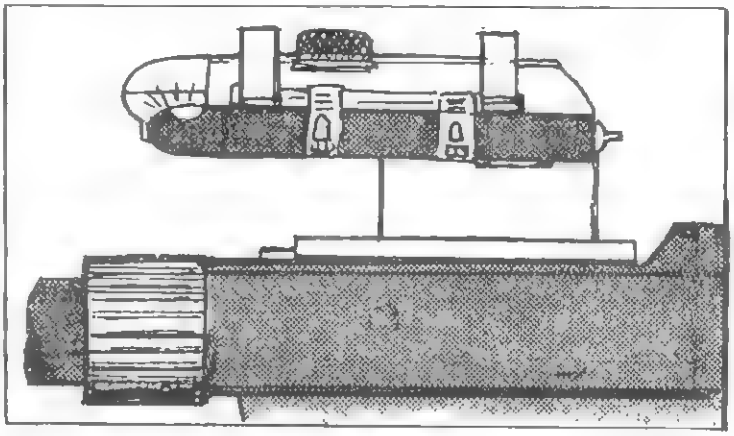

basis of this is the weaver R-22 Qwik Point an optical non-magnifying sight that imposes a red dot on the target. The dot adjusts horizontally and vertically like a conventional scope. This sight costs $30 PPD including dovetail base from Walter Craig, Box 927, Selma, AL 36701 (recent Shotgun News Ad) item#188; or $30.87 plus $2.05 postage from Gander Mountain, Box 248, Wilmot, WI 53192 Item#41-0322; or list of $44.95 at gun stores.

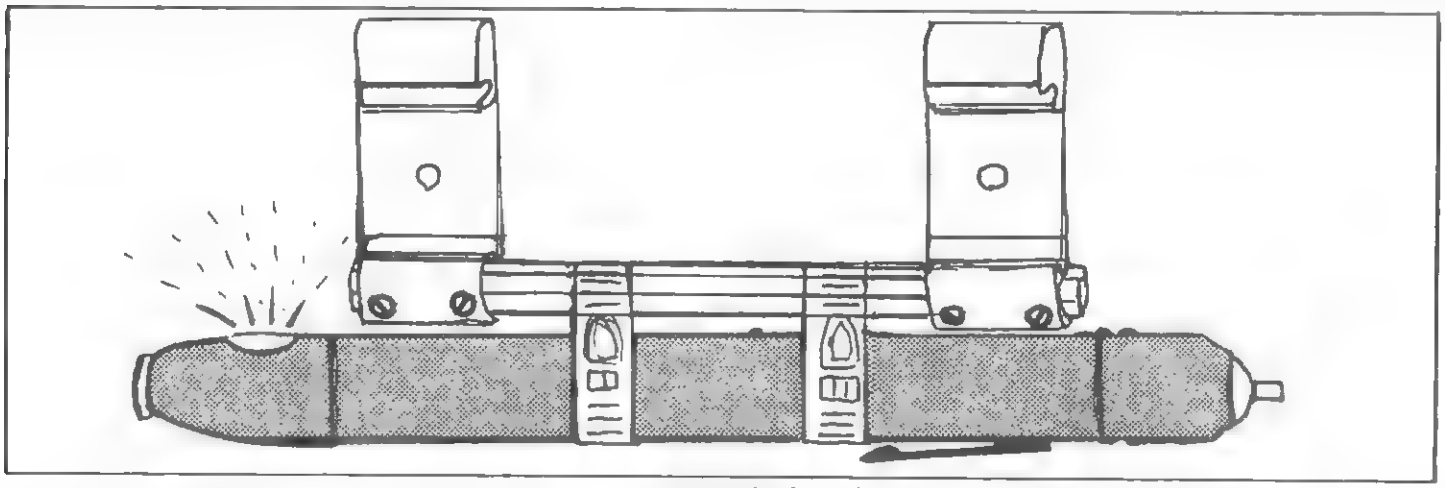

To add dusk and night capability to the regular available-light Qwik Point, one must add a captive light source. A tubular click switch penlight from the local pharmacy or hardware store works good; buy one with a hooded bulb (under $3) and get alkaline penlight batteries. Drill a hole in the hood and plug the forward hole so the light shines to the side. Lining the hood with foil may or may not increase the light. Broom clip-holders from the hardware store fit neatly on the barrel of the Qwik Point sight. The flashlight must then be fixed to the clips. I ran a cut off bic pen body between the clips fixed with sheet metal screws to the clips,then used tubing clamps to attach the flashlight to the pen body, making a detachable unit. The flashlight must shine into the light collector at the front of the Qwik Point, and with the light source clipped on the Qwik Point you have a little red dot that will send your shot to that point under bad or no lighting.

If you want to remain unseen, a cloth bag and rubber band over the light and light collector will hide any faint glow. Aside from the defense advantage of being able to hit things when nobody else can see their sights or scope hairs, it is superb for doing-in rats,pests,etc.,after conventional sights become useless.The Qwik Point fits on your PMA modified scope based AR-7, or any other .22 sight base, and can be interchanged with a scope in seconds, with only a coin as a tool.

EDITOR'S NOTE:

The bulk of the following article was compiled and written by "The Armorer", a professional arms dealer and researcher in the field of special weapons and related devices. All italicized sections are my comments or those supplied by other PMA readers. The bibliography/reference section is comprised of material supplied by the author and PMA readers.

Night Viewing Devices

PART ONE

BY 'THE ARMORER'

M1 Carbine w/Infrared Scope(spotlight not shown)

The ability to observe persons and objects in complete darkness without in turn being detected presents an advantage which should be obvious to PMA readers. Since the 1930's, governments throughout the world have conducted research to perfect equipment which would give their armed forces the ability to see in the dark. Out of those efforts have come the infrared (IR) image viewers such as the World War II era Sniperscope and the more sophisticated light intensifier devices, popularly known as Starlight Scopes, of the Vietnam War period. Yet, as advanced as the latter device seems to be, there are optical instruments currently under development which will provide even greater enhancements to the technology of seeing under adverse light conditions.

INFRARED VIEWERS

IR radiation is nothing more than electromagnetic waves having wavelengths which place them just beyond the range of human visibility. IR waves are slightly longer than visible light waves and are associated with heat radiation. Just as a radio is able to convert transmitted electromagnetic waves into sound, an IR image tube is able to convert these invisible IR waves into images which can be seen by the human eye.

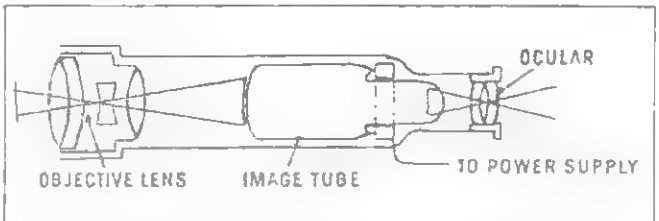

Fig.One: InfraRed Scope Diagram

A simplified diagram of an IR viewer is shown in Figure 1. IR radiation is focused by the objective lens (typically a 35 mm camera lens) onto the cathode of the IR image tube. The cathode is a glass surface containing a semitransparent layer of materials (silver, oxygen and cesium) which discharge electrons in proportion to the amount of IR radiation

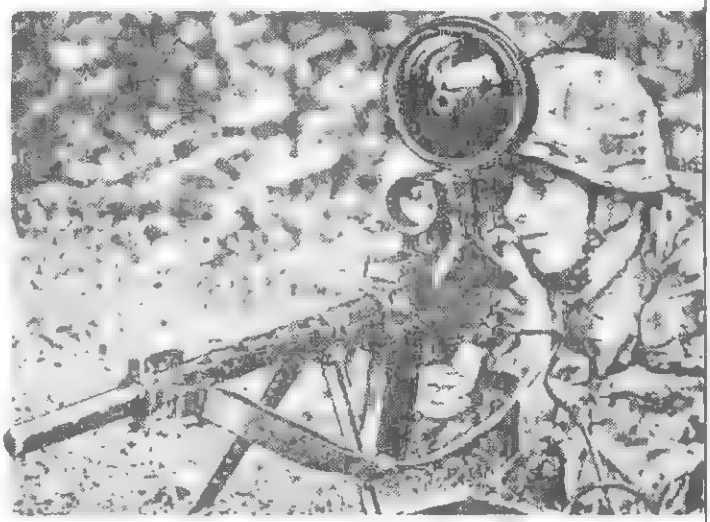

SIG Rifle w/IR Nightscope

reaching the image tube. These electrons are accelerated past an electrostatic focusing mechanism and strike the phosphor coated florescent screen where they are converted into a visible image just like in a television tube. The eyepiece focuses this image into the user's eye.A widely used IR image tube - the RCA 6032 (available from the electronics stores listed at the end of article) requires 20,000 volts to [illegible] viewer built around [illegible] powered by a 12 volt battery and an electronic circuit containing a transformer, oscillator (coil) and voltage multiplier.

While most objects emit natural IR radiation, IR units usually include a source of IR radiation to increase the clarity of images and to extend the useful range of the viewer. By bathing an area with invisible IR radiation, the observer can detect objects off of which the radiation is reflected. The WWII/.30 carbine Sniperscope included a rifle-mounted sealed beam spotlight covered with Corning 2450 heat transmitting glass or a Polaroid XRX filter. The spotlight provided 80,000 foot-candles of illumination which limited the effective range of the scope to 100 yards. Contemporary IR sniping devices such as the West German Night Sight Type B8 - V have ranges in excess of 300 yards. Several nations have used large IR spotlights with which to illuminated battlefields or maintain surveillance of national borders.

A novel application of the IR image tube is the helmet mounted binocular viewers devised in WW II which allowed English truckers to drive in blackouts. These binoculars were used with IR headlights, and permitted the drivers to see 100 yards down the road. Truckers could drive at their normal speeds but sometimes got into difficulty when making sharp turns.

IR viewers have been phased out of use by many armed forces partly because of their dependence upon an IR radiation source. The Sniperscope added 18 pounds to an infantryman's load - most of this weight was the IR spotlight power supply and 12 volt battery. Also, an enemy equipped with an IR viewer could detect the beam of IR radiation and trace it back to its source thus giving away the snipers's location.

Furthermore, the IR tubes could not withstand the shock of repeated gun fire. Phosphor particles would dislodge from the image tube's florescent screen and settle on the lens' electrodes causing internal flashing.

The major advantage of the IR unit was and still is its low cost. Complete units are on the market for $200, and home-made viewers and IR radiation spotlights can be built for less than $100 in parts.

STARLIGHT SCOPE

It was during the Vietnam War when see-in-the-dark devices based upon light intensification came into being. After spending $20 million, the U.S.Army's Night Vision Laboratory developed the Starlight Scope. This device has the ability to take low intensity, barely visible light such as that emitted from stars, the moon shining through clouds, distant street lights and even bioluminescent light from rotting vegetation,and multiply its brightness 50,000 times so that the observer can see objects as if it were daytime.

A diagram of a Starlight Scope is shown in Figure 2. The first generation viewers consisted of an objective lens, three light intensifier tubes, an eyepiece, and a power source. Like the IR image tube, the light intensifier tube contains a cathode on which has been depositied a layer of cesium, antimony, sodium, and potassium. Electrons are emitted when light strikes the cathode, accelerate through a focusing component, and strike the phosphor coating of a fiber optic lens which traps the light and amplifies it 30 to 50 times the original intensity. The focused image from the fiber optic lens is projected onto the cathode of the second light intensifier tube where another 30 to 50 fold increase in brightness occurs. This is repeated a third time so that light has been intensified 50,000 times the level which it entered the scope. The final image is focused onto the human eye.

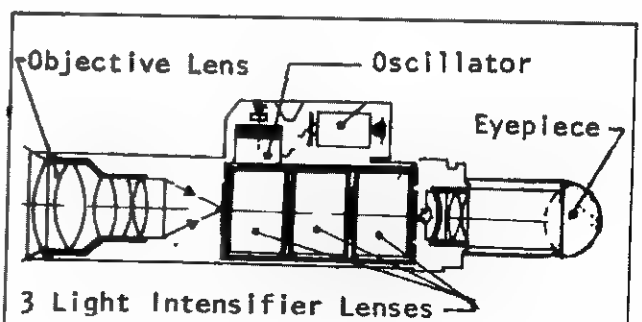

Fig. Two: Starlight Scope Diagram

The Starlight Scope presents many advantages over the IR viewer. It does not require a source of artificial illumination so that the complete unit weighs much less than a Sniperscope (4 pounds vs

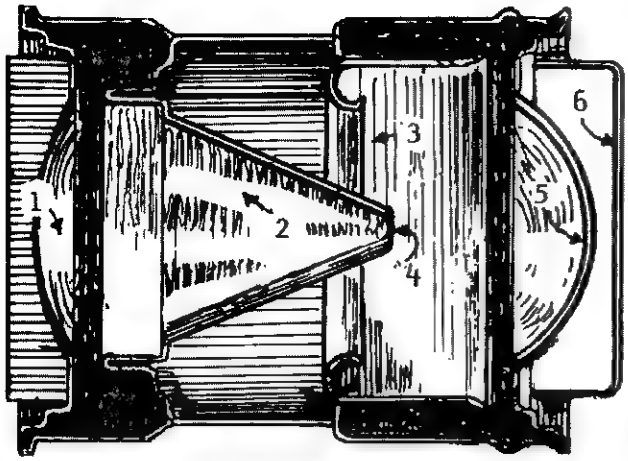

Light Intensifier Tube (1of3)

Here's how scope works.Light hits fiber-optic lens (1).It is coated with photo emissive substance which gives off electrons when struck by light. 15,000 volts are applied,forcing electrons through anode cone (2).Cone and adjacent configuration (3), made up of special metal comprise optical system,shaping image as elecrons speed through cone's aperture (4)and slam into phosphor coating (5)of fiber optic lens (6).Coating is like film in camera, receiving the image for viewing.

18 pounds); it does not require a powerful battery (4 penlight batteries are needed to operate typical Starlight Scopes); and does not emit any radiation so the operator can remain undetected.The theoretical range of the device is infinity though in reality, the useful range is 300 yards for a rifle-mounted scope and 1000 yards for a 60 pound battlefield surveillance viewer.

Second generation light intensifier tubes the size of a sewing thimble have been produced which can amplify light 30,000 to 40,000 times in one tube. The disadvantage of the smaller intensifiers is that they are more expensive than three first generation tubes required to produce equal light amplification and their image clarity is of lower quality. The second generation tubes have been incorporated into Starlight Scopes less than a foot in length and into binocular night vision goggles which weigh less than two pounds. These goggles are used by long range reconnaisance patrols,and by helicopter and aircraft pilots in order to take off and land in complete darkness as might be required in anti-terrorist operations.

Starlight Scopes are not cheap - a stripped down viewer on the civilian market goes for at least $2400 while a scope used for sniping will be priced at $3500 or more. Anyone wishing to purchase a pair of night vision goggles better have $10 grand in his wallet. If one accidently turns on a scope while it is pointed towards a bright light,the intensifier tube(s) will self-destruct and one is left with a very expensive piece of electronic scrap.

Two devices have recently been developed which further advance see-in-the-dark technology. The U.S.Army AN/PAS-7 thermal viewer is a binocular size instrument containing an array of supercooled (-160° F) lead selenide elements which detect minute temperature differences and create an instantaneous television display of these differences.This means that the observer can detect a soldier hidden behind foliage since that person's body temperature differs from the ambient temperature. Also, the thermal viewer can be used to see through fog and haze, and has been evaluated for detecting landmines. The entire unit weighs only 6 pounds, is powered by a belt-mounted battery, and does not require artificial illumination.

Little information is available about the direct imaging spectroscopes developed by the Aspheronics Corporation, a manufacturer of Starlight Scopes. According to Janes Infantry Weapons 1977 ,these devices are: "narrow-band imaging spectroscopes responding to selected frequency bands in the near ultra-violet, visible and near infrared regions. Their purpose is to enhance selected target or terrain features by selecting the radiation band which contains the strongest emissions from such features and them emphasize them in contrast with the remainder of the scene".

ITEMS — ITEM NAMES			
1 CAP COVER(LENS)	31 PACKING(QUAD RING)	48 TERMINAL	58 RETAINING NUT
2 OBJECTIVE ASSY.	32 SET SCREW	49 SEAL(O-RING)	59 DOWEL PIN
3 SLIDE	33 COLLET	50 BATTERY	60 RETICLE ADJUST KNOB
4 PACKING(QUAD RING)	34 LOCKING LEVER	51 SPRING	61 OSCILLATOR CONTACT PIN
5 SET SCREW(SOCKET)	35 FOCUSING LEVER	52 CAP(BATTERY)	62 GROUND CONTACT RING
6 RETICLE ADJUST KNOB	36 SCREW	53 RETICLE ASSY.	63 ALIGNMENT PIN
7 PLUNGER(SPRING INDEX)	37 SCREW MOUNTING	54 IMAGE INTENSIFIER ASSY.	
8 SCREW(SOCKET)	38 SCOPE MOUNT BODY	55 SEAL(O-RING)	
9 PLATE RETICLE ADJUST	39 WASHER	56 EYEPIECE ASSY.	
10 SEAL(O-RING)	40 LOCKING KNOB	57 EYESHIELD	
11 SHAFT	41 SPRING PIN		
12 SEAL(O-RING)	42 LOCKING SCREW		
13 CAP(OSCILLATOR)	43 MOUNT RECEIVER		
14 SPRING	44 WASHER		
15 OSCILLATOR CONTACT	45 CAP HEAD SCREW		
16 OSCILLATOR	46 DOWEL PIN		
17 SCREW	47 BATTERY BOARD		
18 GROUND CONTACT			
19 LAMP			
20 LAMP HOLDER			
21 BOARD			
22 SCREW			
23 CONTACT SPRING			
24 SCREW			
25 LOCK WASHER			
26 NUT			
27 POWER SWITCH			
28 IDENTIFICATION PLATE			
29 MAIN HOUSING			
30 ECCENTRIC SHAFT			

STARLIGHTSCOPE
SMALL HANDHELD OR INDIVIDUAL WEAPONS

Reprinted from Army TM 1090-268-13

PMA 51

Small Starlight Scope

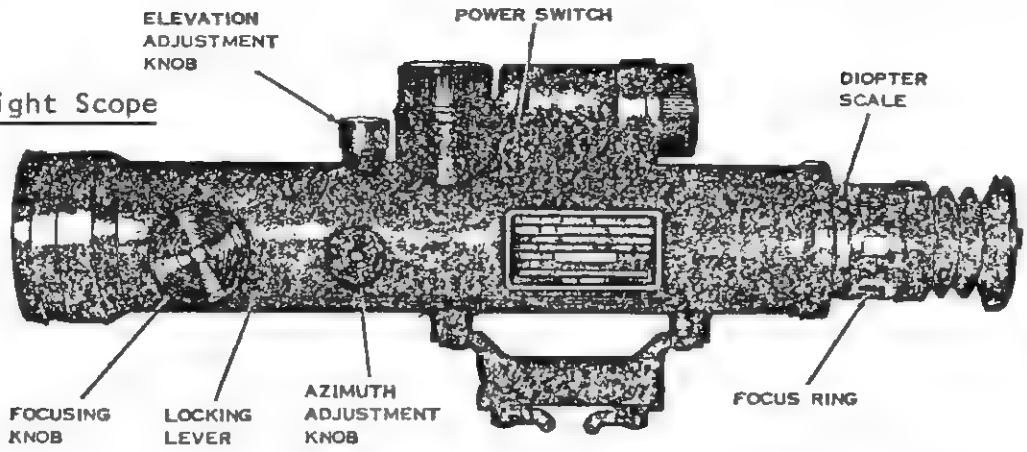

Night Vision Goggles ITT *Electro-Optical Products Div.*

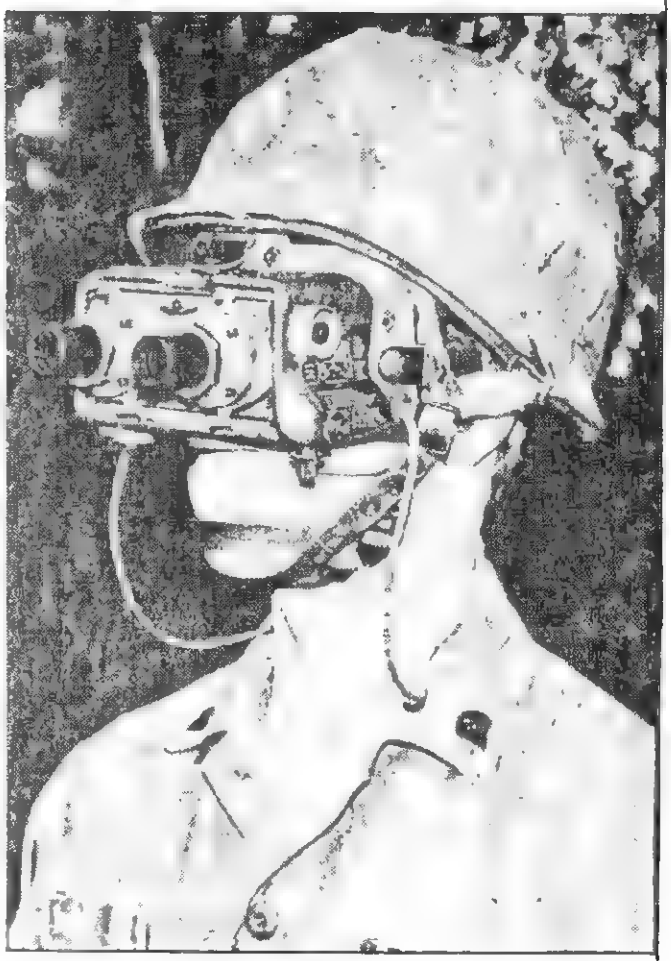

FEATURES

- COMPLETELY SELF-CONTAINED HANDS FREE OPERATION
- FIXED GAIN WITH AUTOMATIC BRIGHTNESS CONTROL
- SELF-CONTAINED AUXILIARY IR ILLUMINATOR

PHYSICAL AND ELECTRICAL

Mounting	Headmount with quick release
Size and Weight	4.7(H) × 6 8(W) × 6 5(D) inches; 30 ounces
Voltage Required	2 0 to 3 5 V D C battery. 40 ma (max)
Battery Life	20 hours at 21°C; 12 hours at -18°C
Temperature Range	-54°C to + 52°C with minor performance reduction
Battery Type	Mallory 303843 (BA-1567/U) or equivalent

PERFORMANCE

Scene Illumination	10^{-5} to 1 ft. candles
Spectral Response	Visible plus IR to 86 microns
Field of View	40°
Magnification	IX (Unity)
Resolution	Nominal .67 lp/mil rad
Brightness Gain	500 Nominal
Diopter Range	+2, −6 diopters
Distortion	1% nominal
Collimation	<1° convergence or divergence <½° dipvergence
Objective Lens	EFL 26.6 mm; F/#1.4; T/#1.51
Eyepiece Lens	EFL 26,6 mm; Exit pupil 10 mm @ 15 mm eye relief; Mag. Power 9.4 ×
Diopter Adjustment	+2, −6 diopters
Interpupillary Adjustment	55 to 72 mm
Eye Relief Adjustment	12 mm minimum
Head Strap Adjustment	to fit

Starlight Operation
Light Weight — 30 oz.
Objective Focus
• Plane
• Bifocal
40° Field
Unity Magnification

A rugged, self-contained night viewing system to provide passive vision using available light from the night sky (thru starlight or moonlight) Two second generation image intensifier tubes, matched with superior optics, are combined in a fully adjustable face mask to provide for completely hands free operation for such night-time tasks as driving, mobile equipment operations, patrol, surveillance, reading and other general purpose viewing including pilot and crew use in helicopter and low-speed aircraft.

Most people in the night scope field designate infrared scopes and viewers as ACTIVE (light generating) to differentiate from the Starlight type of scopes and viewers. The latter are refered to as PASSIVE i.e., no light is produced by the scope.'Passive' devices gather and amplify available light only.

SOURCES FOR "ACTIVE" (IR) RIFLE SCOPES/VIEWERS/PARTS

American Optical
Buffalo, NY
Infrared Sniperscope No.1(T3)(M3).

Scientific Systems
P.O.Box 716
Amherst NH 03031
IR Viewer / range 100 yards. Complete with optics,eyepiece,power supply battery pack,IR source and all necessary construction plans,instructions and parts sources. Plans-$8.00; High voltage power supply and all electronic parts-$44.50; Above assembled and tested-$59.50; Selected 6032 image tube-$16.00; Large 6" government 100 IR filter-$7.00 .

Meshna Corporation
P.O.Box 63
E. Lynn, MA 01904

B & F Electronics
& 119 Foster St.
Peabody, MA

B & F and Meshna sell unused RCA 6032 IR image tubes for $9 to $12; they also provide, with the tube, free instructions on how to construct a complete IR viewer for less than $100 in parts. Radio - Electronics, December, 1974, contains plans for building an IR viewer based on the 6032 tube.B & F sells kits for constructing a viewer; the kit contains the 6032 tube,objective lens,eyepiece, components of the power supply, and instructions.

SOURCES FOR "PASSIVE" (STARLIGHT) RIFLE SCOPES/VIEWERS

Varo, Inc. Texas Division
Box 828, 2201 Walnut St.
Garland, TX 75040
AN/PVS-2 Second Generation Starlight scope, and the Hyper-Miniscope Models 9823/9823E.

Javelin Electronics
6357 Arizona Circle
Los Angeles, CA 90045
A wide assortment of "Passive" rifle scopes and viewers for law enforcement and professional photographers.

Ni-Tec Inc.
7426 Linder Ave.
Niles, IL 60076
NVS-700 Small Starlight Scope.

Smith and Wesson
2100 Roosevelt Ave.
Springfield,MA 01101
Startron MK 700 series I Passive night vision riflescope.

Impossible Electronic Techniques
Box 69
Wayne, PA 19087
Dealers in night vision goggles and Starlight scopes. Unlike many other firms listed, these folks will sell to anyone without restrictions.

Edmund Scientific Corporation
Edscorp Building
Barrington, NJ 08007
The IR section of their catalog is reproduced below.

See In Total Darkness With M3 Sniperscope
Surplus Army IR scope built by RCA & used in surveillance, nature study, mineralogy & research. Operates on 6V car battery or rechargeable Ni-Cd battery (see Pg. 110) 16¾" long telescope with 50.4mm dia lens has 5" dia filter, electrostatically adjusting focus, vert & horiz. reticle intensity adj knob, pistol grip handle w/switch control, strap; & carry case. Power pack (batt not incl) has 6V input, 20,000V output & provides power for #6032 (No 70,160) image tube. Shpg wt 29 lbs.
No. 85,157* $395.00 TCC
*Not available to Calif residents other than for the authorized use by the U.S. Armed Forces or law enforcement officers, or for use solely for scientific research or educational purposes.

Intense 10,000 Lumen Spotlight Or Flood—Rated Life 2,000 Hours
For its size this tungsten halogen lamp is the world's most powerful filament type. Operates in any position! Retains 97% of initial brightness throughout long life has selfcleaning iodine cycle. Excellent indoors or out for spotlights flood lamps or general use. Tapered screw base allows accurate optical alignment. Use with socket or adapter below. Quartz envelope provides resistance to thermal shock. Internally fused. Color temp. approx 3,000°K. For 120V AC-DC. Specifications incl

500w 10,000 lumens 3-5/8 x ½ **No. 40,779 $19.95**
250w 5,000 lumens 3 x ½" **No. 40,780 $16.50**
Socket for above lamps **No. 40,781 $ 4.75**
Adapter to use above lamps in regular light fixtures
No. 41,186 $13.95

Bargain I.R. Filter—Great for making a darkroom safelight, or I.R. light source. Plastic 4 x 4¼ x ⅛. Pkg. of 2
No. 42,299 $2.00

$2.00 I.R. Filter Makes Your Flashlight I.R.
43.6mm dia x 2.8mm thk I.R. filter fits standard flashlights. Makes handy but low-cost I.R. light source. Gov't cost $5.00.
No. 42,143 $2.00

40-Watt Infrared Illuminator
115V AC infrared filtered light source transmits invisible light of between 780-1400nm. Use indoor or out. Illuminator incl adjustable fixture, special I.R. filter; wall/camera mount. 40 watt, 8,000 hr bulb. Wt. 4 lbs. (Requires wiring.)
No. 72,094 $49.95

Infrared Filter For Photo Light Sources, Sniperscopes, Signaling & Alarm Systems
Glass filter w/coating on 1 surface. In total darkness, so little visible light passes through it's undetectable from 20 ft. (even looking directly at light) Gov't surplus. $6 value. 5-3/8 x 1/8" thk.
No. 60,033 $3.00

"PASSIVE" SCOPE PLANS/COMPONENTS

Fantastic Research
Box 96568
Cleveland, OH 44101
This firm sells a complete set of plans for building a 'passive' viewing device capable of magnifying low level light 50,000 times.

Jaegers Optics
691 Merrick Rd.
Lynbrook, NY 11503
Starlight scope eyepiece.

Four of the major components needed when building a 'passive' scope are: 3 image intensifier tubes; 2 nylon coupling rings to join the above tubes; one high voltage multiplier module; and one oscillator module.

When ordering these final two items, you must specify that they are for use in conjunction with image intensifier tubes.

All four items are available from any of the five sources listed below.

A. Varo, Inc.
2203 W. Walnut St.
Garland, TX 75040

B. Amperex Electronics
Slatersville, RI 02876

C. Apollo Lasers, Inc.
6357 Arizona Circle
Los Angeles, CA 90045

D. Starlight Components
1623 Straight Path
Wyandanch, NY 11798

E. ITT - Electro Optical
7635 Plantation Rd.
Roanoke, VA 24019

ADDITIONAL READING SOURCES

US Army TM # 1090-268-13 Starlight Scope, Small Hand Held or Individual Weapons Mounted. US Army, July 1967.

"The Night Vision Device" by E.A.Gale. 1978. Pub. Fantastic Research,Box 96568, Cleveland, OH 44101.

"Death in the Night" by Chuck Taylor. June,1979. Vol.4 #6,Soldier of Fortune Magazine, Box 693, Boulder,CO 80306.

Janes Infantry Weapons, 1977 edition.

"The Laser: Part One" by Mario De Arcangelis. March 1977. Vol.IV, Year V. Armies and Weapons#33 (Atlantic Edition) Magazine. Published by Interconair Media Group, Via G. Brentani 9, 6900 LUGANO Switzerland.

Editor's Note: The publication mentioned last, Armies and Weapons, is probably new to most of our readers. It is distributed extensively throughout Europe and the Middle East. Armies and Weapons is really a trade magazine for defense departments and armament manufacturers. They review different countries' missile systems,ships and tanks, logistics systems,etc. Test new anti-tank, anti-aircraft ammo extensively and give detailed reports on all aspects of it. The ads are very tastefully done with excellent photographs. Issues run $3 each but worth every penny.

U.S.subscription info is available from: Sky Books International Inc., 48 East 50th St., New York, NY 10022.
Bookdealers should contact: Bill Dean Books Ltd., 166-41 Powells Cove Blvd., Whitestone, NY 11357.

Finally, a friendly warning; The majority of the infrared viewers, kits and plans sets currently being advertised are intended for hand held or tripod use only. If used as rifle mounted scopes, some of these viewers may be damaged or even destroyed by the recoil of the weapon. If in doubt about the intended use of any viewing device, check with the manufacturer or designer before mounting or using it on a firearm.

If you suspect that the opposition may be using a Starlight Scope to monitor your area, you have a good chance of destroying the scope. A number of remotely controlled lights can be set up around your position (outside) or in various windows (inside). These devices may be of any type that produce intense beams.Driving lights, Spotlights, flash bulbs or electronic flash guns are a few examples. Each light should be periodically switched on and off rapidly. These lights

Cont.on pp. 55

PRODUCT REVIEWS

By Clyde Barrow

Special Purpose Ammo For Submachineguns

American Ballistics Company, a Georgia based ammo maker, is now producing and marketing subsonic ammunition for use in conjunction with the Ingram M10 and M11 silenced submachineguns. They also carry subsonic ammo for use in the MAC silenced counter-sniper rifles, calibers .223 and .308.

All subsonic rounds are loaded to produce velocities below 1100 feet per second, the speed of sound. This eliminates the "crack" produced by a normal velocity round when fired from a silenced weapon. These loads are also engineered to achieve reduced muzzle flash, greater muzzle energy, stopping power and accuracy than traditional subsonic ammo. An example of previous loads are the special 9mm rounds used in the silenced Sten during WWII. These rounds were similar to the standard .380 load in performance.

One item of special interest is the "Whisperload" cartridge. A standard 9mm or .380 case is loaded with a 130 grain round nose bullet, probably the same one used in the commercial .38 super auto round.

NOTE: Reloaders who wish to duplicate this round might try Remington's 130 grain Metal Case Bullet No.22848.

I have no info on the type or amount of powder used, but the ballistics are nearly identical to the M41 38 Special round (130 grain bullet) used by the US Military. The M41 round is said to have more stopping power than the standard 158 grain load issued to most U.S. police officers.

American Ballistics also markets high performance, high velocity ammo in several pistol and rifle calibers, standard velocity rifle and pistol reloads and MADCAP (Mean Automatic Dispersion from a Central Aiming Point). The latter is a mylar target overlay used to measure relative accuracy, pattern dispersion and shooter proficiency with automatic weapons.

For further info on both ammo and MADCAP, send a signed FFL copy to:

American Ballistics Company,
Box 1410, Marietta, GA 30061.

"Anchorlube" Metalworking Lubricant

Anchorlube is a water soluble non-rusting lubricant for use when drilling, tapping, milling, stamping and punching metals. Applications include use with stainless, high carbon or chrome steel, cast iron, cast aluminum etc. For a free 2 oz. sample and further product info, contact the distributor nearest you:

Anchor Chemical Co.
777 Canterbury Rd.
Cleveland, Ohio 44145 or
Westland Products Co.
674 23rd Street
Oakland, CAL 94612

Night Viewing Devices(Cont.)

should not be placed directly in front of a target as they may draw rifle fire. The use of special infrared flashbulbs or IR filters over the lights will decrease the chance of these lights being seen by the naked eye.

If you are scanning the area through an IR filter and spot a device of the type that emits IR waves, a small hand laser, may be directed at the scope. The nearly invisible intense beam will ruin both the device and the user's vision as well. These lasers are available for 2 or 3 hundred dollars.

Issue Three will have an indepth review of the Passive Viewer Plans available from Fantastic Research. Info on additional sources for night scope parts and plan sets will be included.

60mm Mortar

part 2 BY CLYDE BARROW

NOTE: Please make the following corrections on pp.23 and 25 of Vol.2/Issue 1

PP. 23- Clip collar assembly ID is .95" (not .095").

- The third row of vent holes in the tail body tube is 1.1" from the base (not 1.0").

PP. 25 - Diameter of shell mouth is 1.4"ID

- Inside threads on the mouth of the shell are 1½"x12 threads per inch (not 1½x11 TPI).

- Body OD at the base is .95" (not shown).

- Inside radius of the Bourrelet section is .9" (not 1.0"). Wall thickness in this section should be held to .23" min./.28" max.

The info presented in part one of this article (Vol II, No.1) was based on measurements taken from a 60 mm practice round. I have since obtained copies of government machinist drawings for the 60 mm round. This material was de-classified after WW II, so PMA is free to reprint it. The set of copies was both incomplete and illegible in several spots. I've drawn the missing pieces with estimated dimensions. Included are several notes to clarify unreadable items.

Readers familiar with working from blueprints should have no trouble. If your needs are for a more simplified set of dimensions, the chart on page seven of issue one can be used. Round off the four place decimal numbers to simple fractions.

Example: The plans specify the fuze body length as 1.77"-.02" long. The engineer has allowed the finished length to vary from 1.77"(max)to 1.75"(min). You may find it appropriate to simply list the finished length as 1.75" or even 1-3/4."

I've devoted a great deal of space to this material because the information can be applied to a variety of other weapons projects.

Example: Compare the specs for the rough shell castings and forging (pg.58) with the dimensions of the finished shell (pg.59). Note that the dimensions for the shell interior must be correct after casting or forging, as no further machine work is done inside the shell. On the other hand, all exterior surfaces are cast or forged oversized to allow for final shaping on a lathe. The relationsip of the rough and finished measurements can be used as a guideline when designing molds, cores and forging tools for similar projects.

Notes on Filler and Booster Charge:

TNT (Trinitrotoluene) is produced from toluene,sulfuric acid, and nitric acid. It is a powerful high explosive with a velocity of detonation of about 21,000 feet per second. It is well suited for steel cutting, concrete breaching, and general demolition.

TNT is relatively insensitive to shock. It will not detonate on the strike of a single rifle bullet, but may do so under sustained machinegun or rifle fire.

TNT may vary in color from a pale yellow to an orange. Its color is influenced by time and by the purity of the explosive.

TNT is crystalline and is issued in pressed form. It can be steam melted. It burns at 266° F. Small quantities (up to 1 pound) of it may be burned in open areas without fear of detonation.

TNT is toxic; TNT dust should not be inhaled in quantity or allowed to contact the skin excessively. The gases produced by an explosion of TNT are poisonous.

Tetryl

Tetryl (trinitrophenylmethylnitramine) is a fine, yellow crystalline which is more powerful than TNT. Pure tetryl is too shocksensitive to be used as a demolition explosive; however, when small quantities are compressed into pellet form it is perfectly safe. Tetryl booster pellets are commonly used in bursting projectiles to assure the detonation of a less sensitive filler explosive. Tetryl is also compounded with TNT to form the demolition explosive tetryol.

Tetryl is practically nonhygroscopic and is insoluable.Tetryl will detonate if exposed to a temperature of 500° F.

SHELL BODIES - STEEL GRADES

Type A-Forging-WD 55-1 carbon 0.18-.028%
Type B-Rolled Plate - WD 1020 Steel
Type D-Casting-Cast Steel
Type F-Stamped and Drawn Plate
Type G-Stamping-WD 1010 Steel

AA - Casting Shell Bodies

Most small shops will not be able to produce steel castings, and will have to use gray iron, brass or an aluminum alloy. Iron is prefered, but most home foundries are set to pour brass and aluminum only. One furnace capable of melting iron is featured on pg.73 of this issue. Use of alternate shell body materials will require slight adjustments in dimensions to maintain proper weight, shell capacity and wall strength.

BB - Forging Shell Bodies

The above furnace (pg.73)will also be sufficient to allow hot forging. Refer to Vol II, No.1 for info on shell forging in the small shop. The 60mm shell is similar to the 81 mm shell shown.

CC - Dieforming Shell Bodies

The info for dieforming shell bodies was not included in set of drawings. In general, body halves are pressed from flat pieces of sheet steel. The completed halves are joined by welding as outlined on page 59. As with the other types of shell production, all interior dimensions should be correct after pressing. After welding the outside is machined to the specs on page 59.

DD - Shell Body OD - CRITICAL

The mortar barrel is constructed from 2.75 OD-2.375 ID steel seamless mechanical tubing. Manufacturing tolerances require tubing ID to be honed to .005"/.010" oversized (2.380"+.005"). It is therefore critical that finished shell bodies (including painting and marking) are able to slip through a 2.364" max ID ring gage. Max OD of completed tail assembly is 2.375"-.005".

EE - Thread Cutting

The following sizes of taps and dies are needed to complete the 60mm mortar round. Items marked NF (National Fine)are available from most auto supply or hardware stores. Those marked NS (non-standard)are special sizes that must be obtained from tool suppliers like B-Square Co. (see Vol II,No.1, pg.13) or Field Tool Supply Co., 2350 N.Seeley Ave., Chicago, ILLINOIS 60647.

If you are limited to the use of standard NF taps and dies, convert the NS sizes to their NF equivilant as shown in the chart.

Standard Taps/Dies:	
1-1/2x12 NF	-available locally
5/16 x24 NF	- " "
1/4 x28 NF	- " "

Special Tap/Dies:		
1-1/8x20 (NS)	or use	1-1/8x12 NF
9/16 x24 (NS)	" "	9/16 x18 NF
3/4 x18 (NS)	" "	3/4 x16 NF

In lieu of taps/dies, all thread cutting,(except in the three small holes in the fuze body) can be done on a thread cutting lathe.

FF - Machining

Almost all remaining machine work, including all small parts, can be done on a metal cutting lathe. All holes can be drilled with a drill press. A rotary indexing table for the drill press is not essential, but it simplifies locating the various holes in the fuze body in proper relation to each other. (90° and 40° from reference lines).

The only flat machining required is slotting and milling a flat on the slider assembly. This can also be done w/a file or hand grinder or by clamping the piece in a horizontal feed unit on a drill press. The work is fed into a grinding stone mounted in the drill's chuck.

Note that various parts can be made from aluminum, zinc, brass or steel, depending upon availability.

Spring making is a complex process. Appropriate springs should be obtained readymade to insure reliability.

GG - Die Forming/Die Casting

Punch and die info for stamping out and forming the striker and booster cup will be covered in Vol II, No.3 & 4.These parts can also be machined from solid stock or from tube and flat stock as shown.

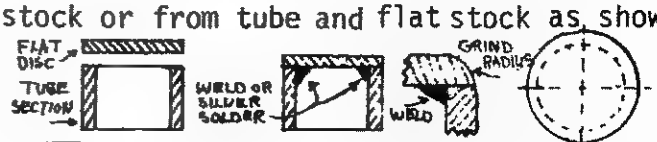

Production of die casting molds for the fuze body and head assemblies are beyond the scope of the small shop. These pieces can be produced as oversized sand castings machined to finished size.

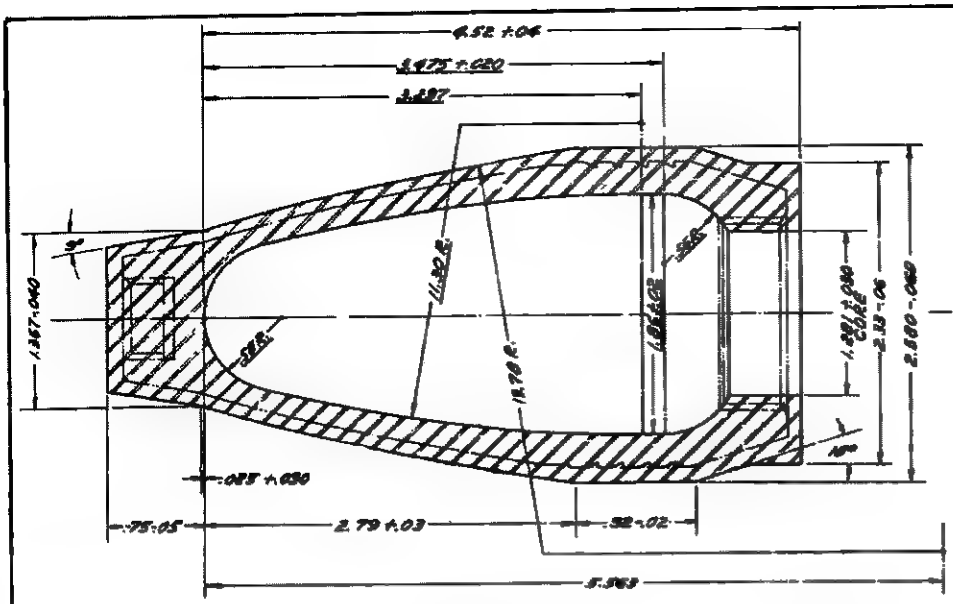

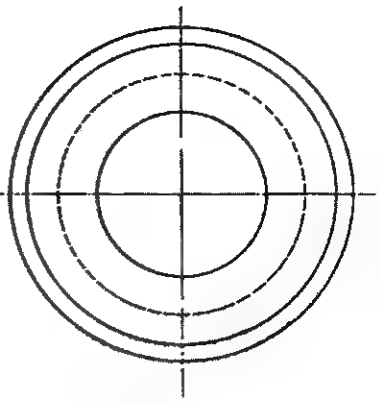

SEE NOTE AA-PAGE 57

CASTING, SHELL 75-20-83A

NOTES:-
A- MAXIMUM PERMITTED ECCENTRICITY BETWEEN CAVITY OF SHELL AND OUTSIDE SURFACE AT ANY POINT, .065. (WHEN MEASURING ECCENTRICITY BY MEANS OF A DIAL INDICATOR THE TOTAL READING ON THE DIAL IS TWICE THE ECCENTRICITY.)
B- CASTING TO WITHSTAND AN INTERNAL AIR PRESSURE TEST OF 250 LBS. PER SQ. IN.
C- DOT AND DASH LINES INDICATE FINISHED SHELL.
D- UNDERLINED DIMENSIONS ARE FINISHED SIZES AND WILL NOT BE MACHINED.
E- CAVITY MUST BE FREE FROM SCALES, PITS, SEAMS, LAMINATIONS, CRACKS, BLOW HOLES, POCKETS, SAND, OR OTHER IMPERFECTIONS. THE FINISH OF THE CAVITY SURFACE MUST BE THE EQUAL OF A FINISH BORED CAVITY.
F- CAPACITY OF CAVITY AS CAST SHALL BE 8.85 CU. IN. APPROX.
G- IF MANUFACTURER OF CASTING IS ALSO MANUFACTURER OF THE SHELL; DIMENSIONS OF CASTING MAY BE VARIED TO GIVE ALLOWANCES FOR MACHINING AS REQUIRED BY HIM.

WEIGHT OF CASTING = 2.30 POUNDS MAX.

CASTING FOR SHELL, H.E. 60MM, M49A2 AND PRACTICE, 60MM, M50A2

75	20	83

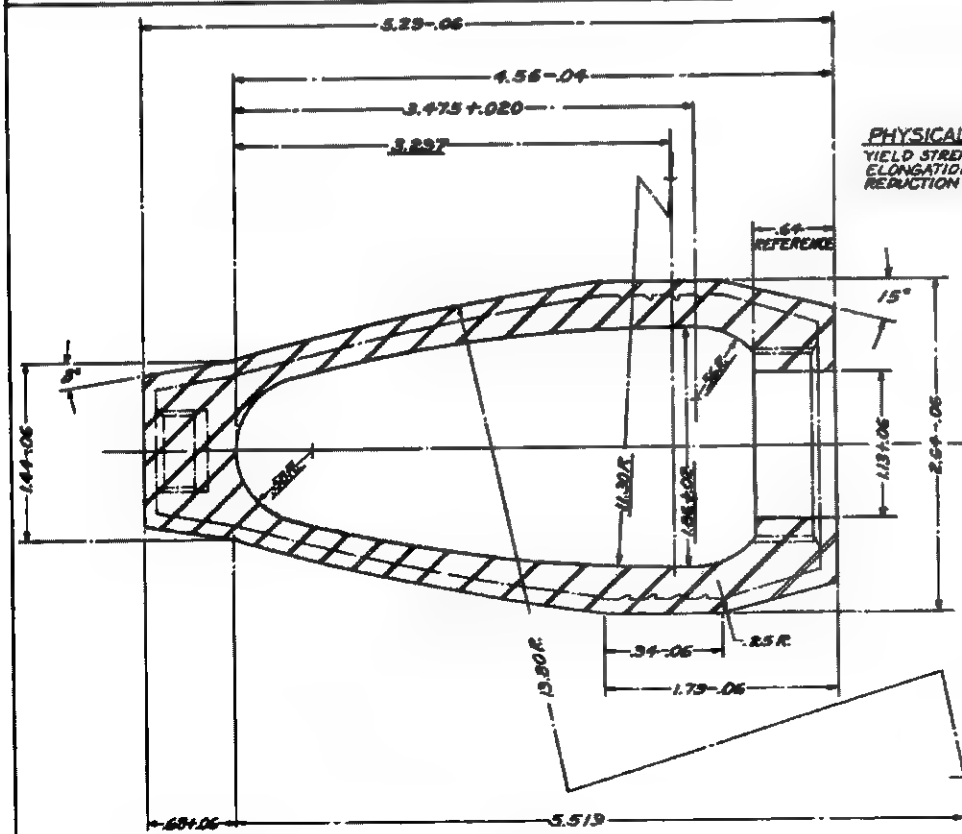

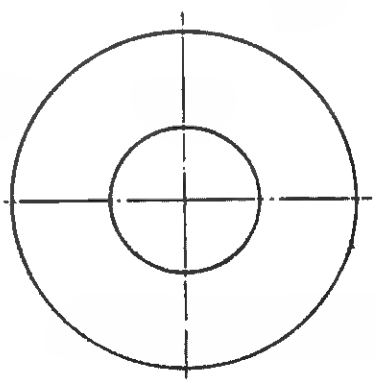

SEE NOTE BB-PAGE 57

PHYSICAL PROPERTIES

YIELD STRENGTH	NOT LESS THAN 38,000 LBS. PER SQ. IN.
ELONGATION IN 2 INCHES	NOT LESS THAN 15%
REDUCTION OF AREA.	NOT LESS THAN 30%

FORGING, SHELL 75-20-85A1 STEEL

MAX. WEIGHT OF FORGING = 3.33 LBS.

NOTES:
A. UNDERLINED DIMENSIONS ARE FINISHED SIZES AND WILL NOT BE SUBSEQUENTLY MACHINED.
B. DOT AND DASH LINES REPRESENT FINISHED SHELL.
C. MAXIMUM PERMITTED ECCENTRICITY BETWEEN SHELL CAVITY AND OUTSIDE SURFACE AT ANY POINT, .04 (WHEN MEASURING ECCENTRICITY BY MEANS OF A DIAL INDICATOR, THE TOTAL READING ON THE DIAL IS TWICE THE ECCENTRICITY).
D. IF MANUFACTURER OF FORGING IS ALSO MANUFACTURER OF THE SHELL; DIMENSIONS OF FORGING MAY BE VARIED TO GIVE ALLOWANCES FOR MACHINING AS REQUIRED BY HIM.

FORGING FOR SHELL, H.E. 60MM, M49A2 AND PRACTICE, 60MM, M50A2

75	20	85

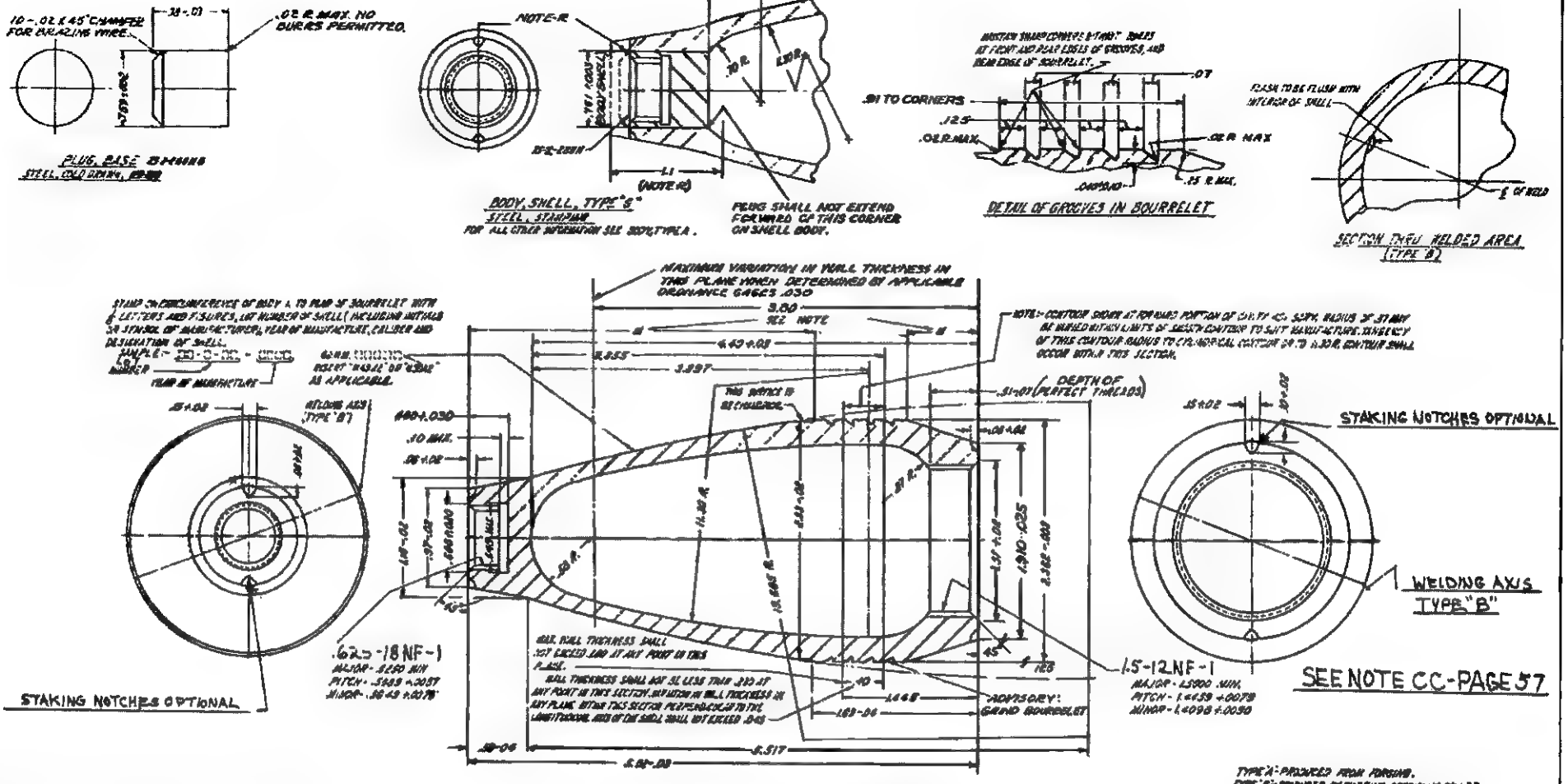

NOTES:-

A - MEAN VOLUME OF CAVITY TO OVERFLOWING - 87 CU IN APPROX.

B - MEAN DIMENSIONS USED FOR COMPUTING WEIGHTS.

C - TOLERANCE ON CAPACITY REMAINED BY TOLERANCE ON DIMENSIONS.

D - WEIGHT TOLERANCE NOT MEASURED BY TOLERANCES. CONTROL DIMENSION TOLERANCES TO BRING SHELL BODY WITHIN WEIGHT TOLERANCE.

E - DIMENSIONS FOR WHICH NO TOLERANCES ARE GIVEN WILL NOT BE INDIVIDUALLY GAGED.

F - SHELL MUST BE CAREFULLY CONTROLLED DURING VARIOUS MACHINING OPERATIONS IN ORDER TO MAINTAIN CONCENTRICITIES OF CYLINDRICAL SURFACES. THE FOLLOWING MAXIMUM ECCENTRICITIES OF CYLINDRICAL SURFACES WILL BE ACCEPTED. (WHEN MEASURING ECCENTRICITY BY MEANS OF A DIAL INDICATOR THE TOTAL READING OF THE DIAL IS TWICE THE ECCENTRICITY)

J - BETWEEN THE NOSE THREADS, FIN SEAT THREADS AND OUTSIDE CYLINDRICAL SURFACES, .01 IN. (WHEN TAKEN BETWEEN BOURRELET, WITH NOSE THREADS AND BASE THREADS, TOLERANCE INCLUDES OUT OF SQUARENESS OF FACES.)

G - PRIOR TO PAINTING, CLEAN SHELL SURFACES IN ACCORDANCE WITH GRADE II, SPEC JAN-C-490.

H - COAT INTERIOR SURFACES OF SHELL EXCEPT THREADS WITH ACID-PROOF BLACK PAINT, TYPE I OR II.

K - COAT EXTERIOR SURFACE OF SHELL, EXCEPT NOSE AND BASE, WITH LACQUER ENAMEL OR ENAMEL, OLIVE DRAB.

M - FOR SHELL TYPE "B" THESE SURFACES NEED NOT BE MACHINED EXCEPT FOR REMOVAL OF WELDING FLASH, MAINTAINING TRUE CONTOUR OF SHELL.

N - AT NO POINT SHALL NOSE THICKNESS BE LESS THAN .03

R - SILVER BRAZE SHOT OFFICE ASSEMBLING PLUG. LOCALIZE BRAZING HEAT IN REGION SPECIFIED BY MEANS OF INDUCTION HEATING. MINIMUM ALLOWABLE QUANTITY OF SILVER SOLDER WIRE TO BE .073 MIN. DIA. # 22 LONG. PLUG TO BE BRAZED BEFORE MACHINING OF PLUG CAVITY AND EXTERIOR OF SHELL.

S - MAXIMUM ALLOWABLE GAP IN MEASURING OUT OF SQUARENESS OF THREAD AXIS WITH SHELL NOSE FACE WHEN DETERMINED BY APPLICABLE ORDNANCE GAGES, .003

T - BOURRELET AFTER PAINTING MUST PASS A 2.364 MAX. DIAMETER RING GAGE.

TYPE "A" - PRODUCED FROM FORGING.
TYPE "B" - PRODUCED BY CUPPING SPECIALLY ROLLED PLATE AND WELDING LONGITUDINALLY.
TYPE "D" - PRODUCED FROM STEEL CASTING.
TYPE "F" - PRODUCED BY STAMPING AND DRAWN FROM STEEL PLATE.
TYPE "G" - PRODUCED BY STAMPING AND DRAWN FROM STEEL PLATE, BUT INCORPORATING BASE PLUG SILVER BRAZED IN PLACE (SEE GAR419).

SEE NOTE DD-PAGE 57

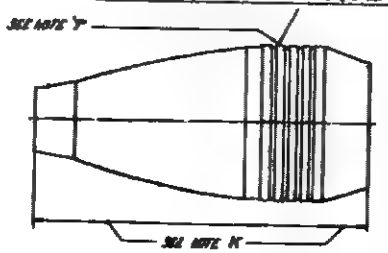

METAL PARTS SHIPPING ASSEMBLY 75-2-288E 10

TYPE	PIECEMARK	TYPE	PIECEMARK
"A"	75-2-288A 10	"B"	75-2-288B 10
"B"	75-2-288B 10		
"D"	75-2-288D 10		
"F"	75-2-288F 10		

SHELL, H.E. 60MM, M49A2 AND PRACTICE, 60MM M50A2, METAL PARTS SHIPPING ASSEMBLY & DETAILS.

75	2	288

COMPLETED ASSEMBLY MUST PASS THROUGH A 2.375 MAX. I.D. RING GAGE - THIS IS CRITICAL!

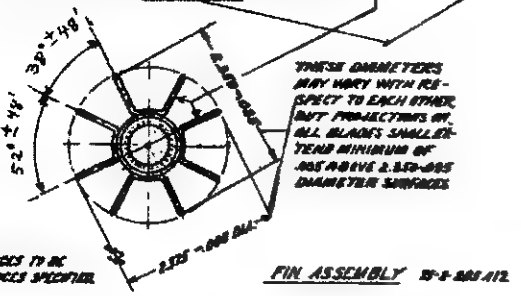

LONGITUDINAL ALIGNMENT OF FIN BLADES WITH PITCH DIAMETER OF .625-18 NS-2 THREAD AND FORWARD SEATING SHALL BE TO BE WITHIN LIMITS OF APPLICABLE ORDNANCE GAGES.

FIN ASSEMBLY 75-2-285 A12

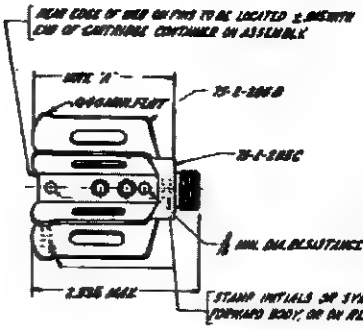

NOTES:-
A- COAT ENTIRE EXTERIOR SURFACE, EXCEPT FORWARD THREADS AND SEAT, AND REAR COUNTERBORE, WITH BLACK BAKE LACQUER ENAMEL OR ENAMEL, INTERIOR OF CARTRIDGE CONTAINER NOT TO BE PAINTED. (mil)
B- ECCENTRICITY BETWEEN THE 2.375-.005 DIA OF FIN BLADES AND PITCH DIA OF .625-18 NF-2 THREADS OF PC MK 75-2-285C, .005 T.I.R. A DIAL INDICATOR READING OF .01 TOLERANCE INCLUDES OUT-OF-SQUARENESS OF FORWARD SEATING SURFACE)
C- ECCENTRICITY BETWEEN PITCH DIA OF .75-18 NS-2 THREAD AND PITCH DIA OF .625-18 NF-2 THREAD OF PC MK 75-2-285C, .004 MAX., T.I.R. A TOTAL DIAL INDICATOR READING OF .010.
D- COAT CAVITY AND THREADS WITH CLEAR LACQUER ENAMEL OR PHENOL FORMALDEHYDE TYPE RESIN VARNISH. THICKNESS OF COATING ON THREADS MUST NOT EXCEED .0005 IN.

NOTE: REFER TO PAGE 23-VOL. TWO / ONE

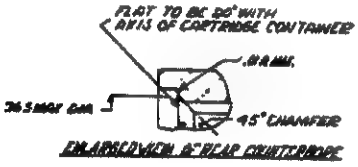

ENLARGED VIEW OF REAR COUNTERBORE

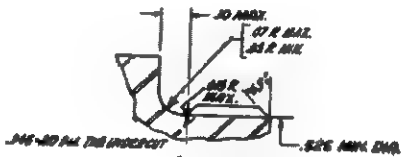

ENLARGED VIEW

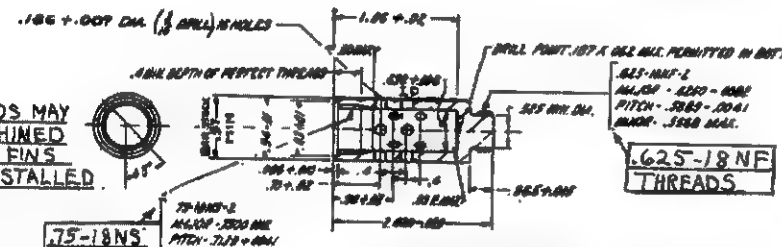

CONTAINER CARTRIDGE 75-2-284 C10
STEEL 1541 RBR
FINISH S

* SPECIFIED PHYSICAL PROPERTIES OF CARTRIDGE CONTAINER ARE REQUIRED IN COMPLETED ASSEMBLY. USE OF STEEL BARS WITH ELONGATION OF 14 PERCENT MINIMUM IS PERMITTED WHEN BARS HAVE NOT BEEN STRAIN ANNEALED.

PHYSICAL PROPERTIES (IN)
YIELD POINT - 75,000 LBS PER SQ IN MIN.
ELONGATION - 15 % MIN.
RED - 30 % MIN.

N-NOTE-
ECCENTRICITY BETWEEN THE .94-.01 DIA SURFACE AND PITCH DIA OF .75-18 NS-2 THREAD, .005 MAX. T.I.R. A TOTAL INDICATOR READING OF .010

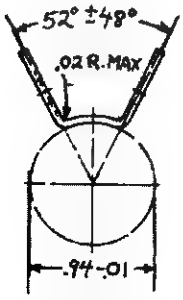

FIN 75-2-285 B10
STEEL WELDING
SMOOTH, SEMI-GLOSS

PHYSICAL PROPERTIES
YIELD POINT - 45,000 LBS PER SQ IN MIN.
ELONGATION - 12 % MIN.
HARDNESS - 85 MIN (ROCKWELL 'B')

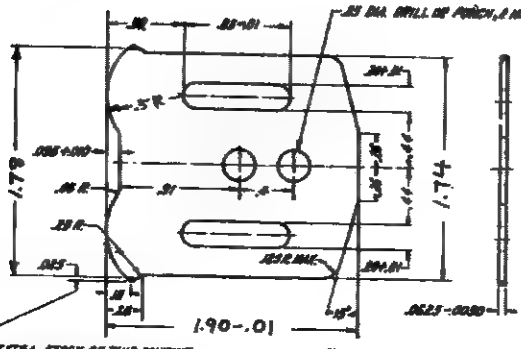

EXTRA STOCK OF THIS CONTOUR PERMITTED FOR FINISHING TO 2.375-.005 DIA ON ASSEMBLY

FIN DEVELOPMENT
(A) TOLERANCES APPLICABLE TO PUNCHES AND DIES

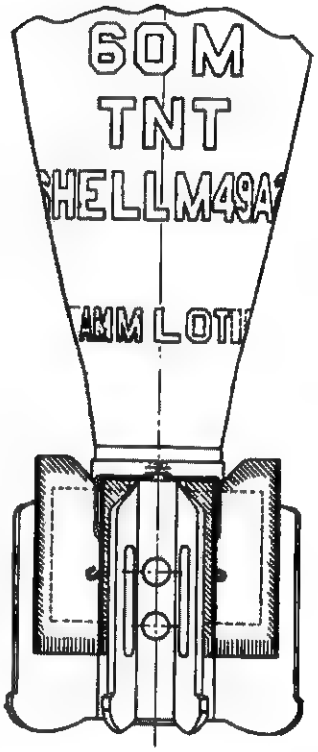

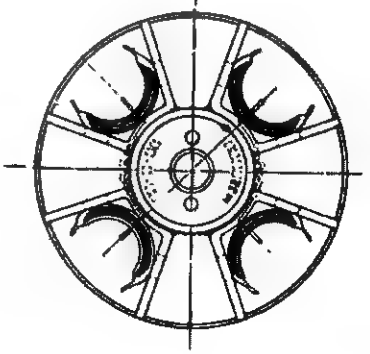

CARTRIDGE CONTAINER AND FIN ASSEMBLY

75 | 2 | 285

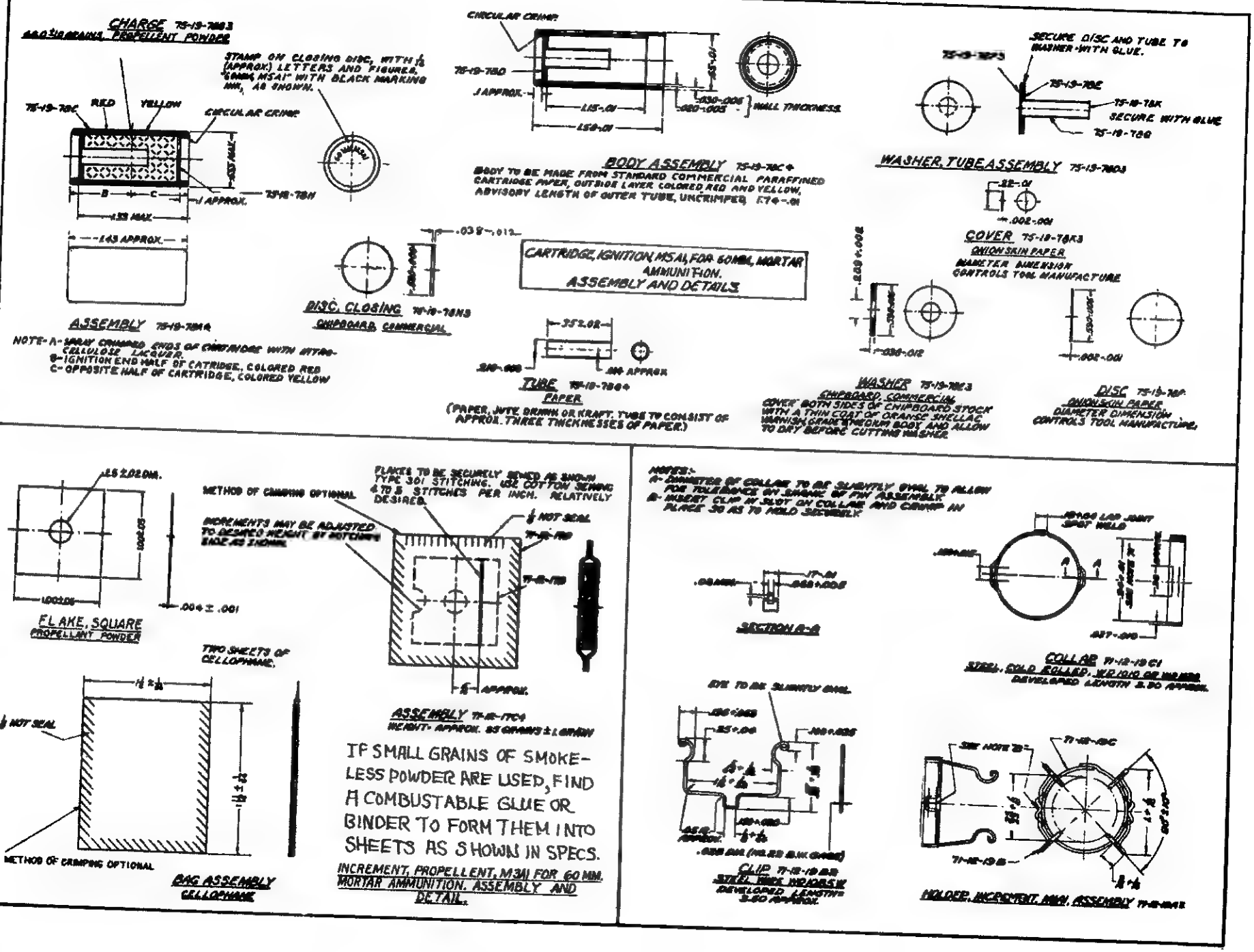
CHARGE 75-19-78B3
PROPELLENT POWDER
STAMP ON CLOSING DISC, WITH 1/8 (APPROX.) LETTERS AND FIGURES, "60MM, M5A1" WITH BLACK MARKING INK, AS SHOWN.
RED
YELLOW
CIRCULAR CRIMP
ASSEMBLY 75-19-78A4
NOTE- A- SPRAY CRIMPED ENDS OF CARTRIDGE WITH NITROCELLULOSE LACQUER.
B- IGNITION END HALF OF CATRIDGE, COLORED RED
C- OPPOSITE HALF OF CARTRIDGE, COLORED YELLOW
DISC, CLOSING 75-19-78N3
CHIPBOARD, COMMERCIAL
CIRCULAR CRIMP
WALL THICKNESS
BODY ASSEMBLY 75-19-78C4
BODY TO BE MADE FROM STANDARD COMMERCIAL PARAFFINED CARTRIDGE PAPER, OUTSIDE LAYER COLORED RED AND YELLOW, ADVISORY LENGTH OF OUTER TUBE, UNCRIMPED 1.74-.01
CARTRIDGE, IGNITION, M5A1, FOR 60MM, MORTAR AMMUNITION.
ASSEMBLY AND DETAILS
TUBE 75-19-78B4
PAPER
(PAPER, JUTE DRAWN OR KRAFT. TUBE TO CONSIST OF APPROX. THREE THICKNESSES OF PAPER.)
SECURE DISC AND TUBE TO WASHER WITH GLUE.
SECURE WITH GLUE
WASHER, TUBE ASSEMBLY 75-19-78D3
COVER 75-19-78K3
ONION SKIN PAPER
DIAMETER DIMENSION CONTROLS TOOL MANUFACTURE
WASHER 75-19-78E3
CHIPBOARD, COMMERCIAL
COVER BOTH SIDES OF CHIPBOARD STOCK WITH A THIN COAT OF ORANGE SHELLAC VARNISH, GRADE 3 MEDIUM BODY AND ALLOW TO DRY BEFORE CUTTING WASHER
DISC 75-19-78F
ONION SKIN PAPER
DIAMETER DIMENSION CONTROLS TOOL MANUFACTURE.
FLAKE, SQUARE
PROPELLANT POWDER
METHOD OF CRIMPING OPTIONAL
INCREMENTS MAY BE ADJUSTED TO DESIRED HEIGHT BY NOTCHING SIDE AS SHOWN
FLAKES TO BE SECURELY SEWED AS SHOWN TYPE 301 STITCHING. USE COTTON SEWING 4 TO 5 STITCHES PER INCH. RELATIVELY DESIRED.
1/8 NOT SEAL
ASSEMBLY 71-12-17C4
WEIGHT- APPROX. 85 GRAINS ± 1 GRAIN
TWO SHEETS OF CELLOPHANE.
1/8 NOT SEAL
METHOD OF CRIMPING OPTIONAL
BAG ASSEMBLY
CELLOPHANE
IF SMALL GRAINS OF SMOKELESS POWDER ARE USED, FIND A COMBUSTABLE GLUE OR BINDER TO FORM THEM INTO SHEETS AS SHOWN IN SPECS.
INCREMENT, PROPELLENT, M3A1 FOR 60 MM. MORTAR AMMUNITION. ASSEMBLY AND DETAIL.
NOTES:-
A- DIAMETER OF COLLAR TO BE SLIGHTLY OVAL TO ALLOW FOR TOLERANCE ON SHANK OF FIN ASSEMBLY.
B- INSERT CLIP IN SLOT ON COLLAR AND CRIMP IN PLACE SO AS TO HOLD SECURELY.
SECTION A-A
COLLAR 71-12-19C1
STEEL, COLD ROLLED, WD 1010 OR WD 1020
DEVELOPED LENGTH 3.50 APPROX.
EYE TO BE SLIGHTLY OVAL.
CLIP 71-12-19B2
STEEL WIRE WD 1035 W
DEVELOPED LENGTH= 3.50 APPROX.
HOLDER, INCREMENT, M3A1, ASSEMBLY 71-12-19A2

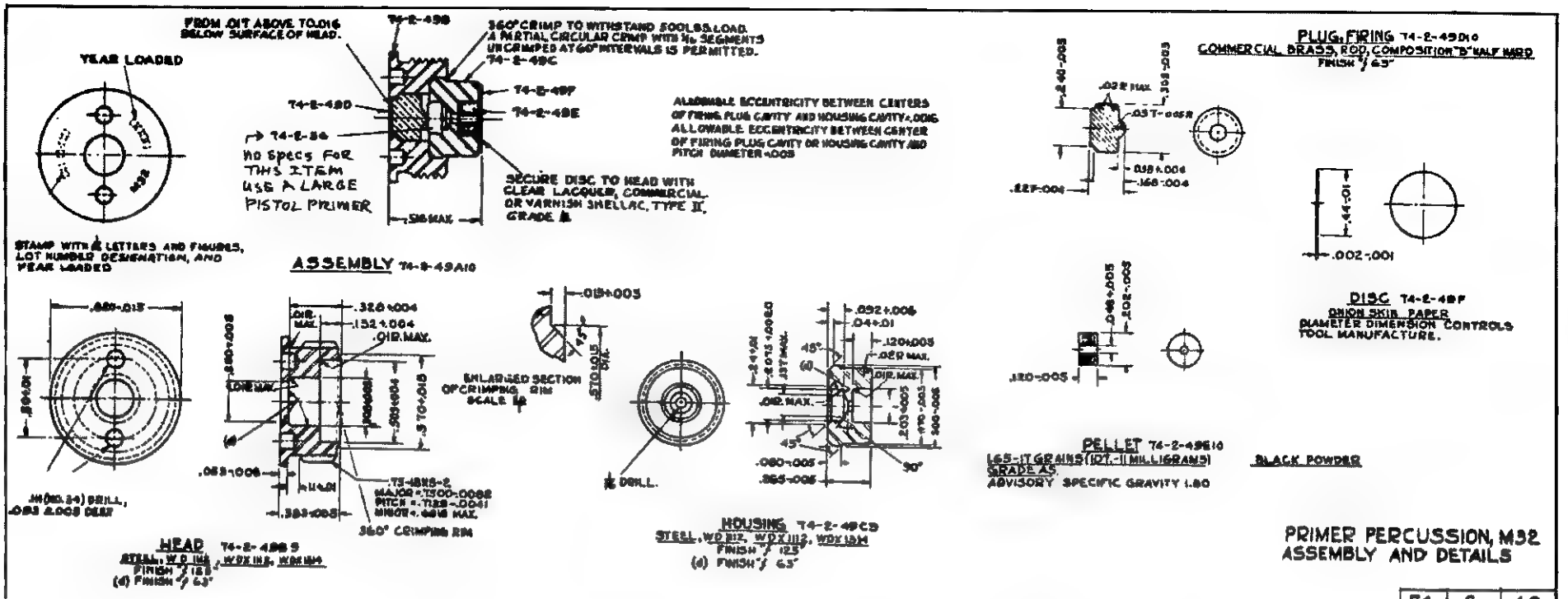
YEAR LOADED
STAMP WITH ℄ LETTERS AND FIGURES, LOT NUMBER DESIGNATION, AND YEAR LOADED
FROM .017 ABOVE TO .016 BELOW SURFACE OF HEAD.
74-2-49B
360° CRIMP TO WITHSTAND 500 LBS. LOAD. A PARTIAL CIRCULAR CRIMP WITH 1/16 SEGMENTS UNCRIMPED AT 60° INTERVALS IS PERMITTED.
74-2-49C
74-2-49F
74-2-49E
74-2-49D
74-2-36
NO SPECS FOR THIS ITEM USE A LARGE PISTOL PRIMER
SECURE DISC TO HEAD WITH CLEAR LACQUER, COMMERCIAL OR VARNISH SHELLAC, TYPE II, GRADE A
ALLOWABLE ECCENTRICITY BETWEEN CENTERS OF FIRING PLUG CAVITY AND HOUSING CAVITY = .006
ALLOWABLE ECCENTRICITY BETWEEN CENTER OF FIRING PLUG CAVITY OR HOUSING CAVITY AND PITCH DIAMETER = .005
ASSEMBLY 74-2-49A10
PLUG, FIRING 74-2-49D10
COMMERCIAL BRASS, ROD, COMPOSITION "B" HALF HARD
FINISH #/ 63"
DISC 74-2-49F
ONION SKIN PAPER
DIAMETER DIMENSION CONTROLS TOOL MANUFACTURE.
.002-.001
PELLET 74-2-49E10
1.65-1.7 GRAINS (107.-11 MILLIGRAMS) GRADE A5.
ADVISORY SPECIFIC GRAVITY 1.80
BLACK POWDER
HEAD 74-2-49B5
STEEL, WD 1112, WDX 1112, WDX 1314
FINISH #/ 125
(d) FINISH #/ 63"
360° CRIMPING RIM
ENLARGED SECTION OF CRIMPING RIM SCALE 1/2
HOUSING 74-2-49C5
STEEL, WD 1112, WDX 1112, WDX 1314
FINISH #/ 125
(d) FINISH #/ 63"
PRIMER PERCUSSION, M32
ASSEMBLY AND DETAILS
74 | 2 | 49

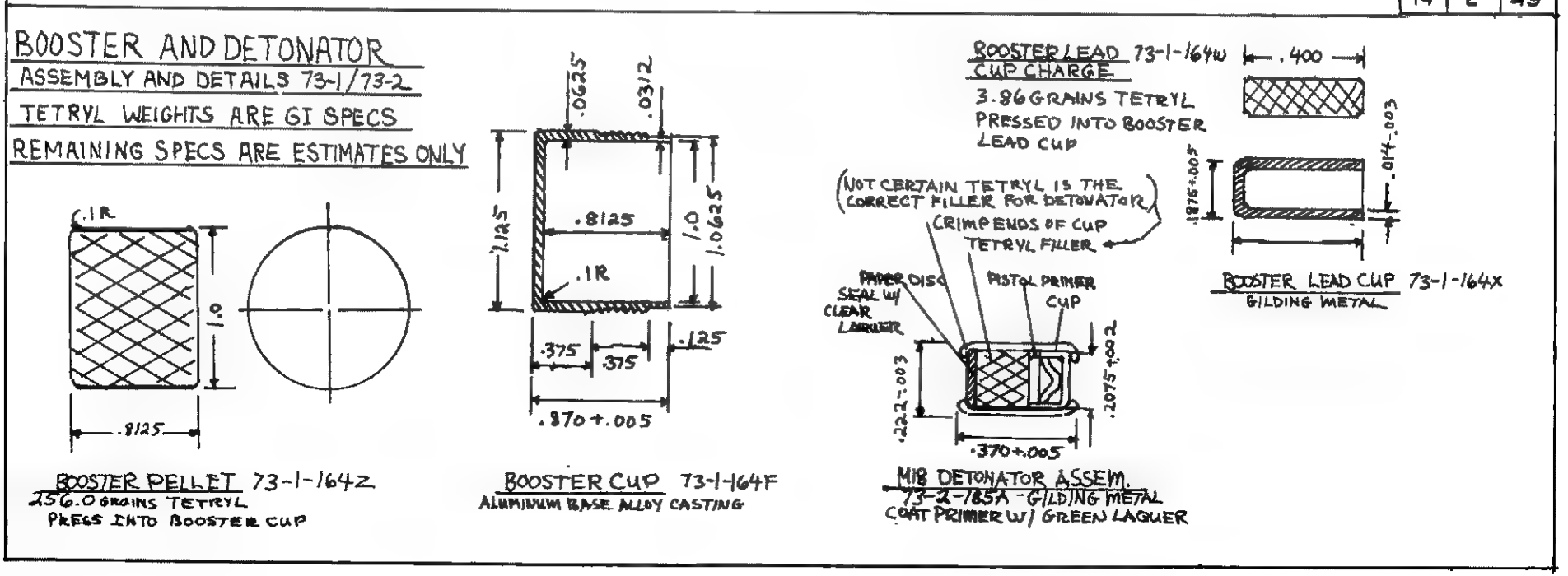
BOOSTER AND DETONATOR
ASSEMBLY AND DETAILS 73-1/73-2
TETRYL WEIGHTS ARE GI SPECS
REMAINING SPECS ARE ESTIMATES ONLY
BOOSTER PELLET 73-1-164Z
256.0 GRAINS TETRYL
PRESS INTO BOOSTER CUP
BOOSTER CUP 73-1-164F
ALUMINUM BASE ALLOY CASTING
BOOSTER LEAD 73-1-164W
CUP CHARGE
3.86 GRAINS TETRYL
PRESSED INTO BOOSTER LEAD CUP
(NOT CERTAIN TETRYL IS THE CORRECT FILLER FOR DETONATOR)
CRIMP ENDS OF CUP
TETRYL FILLER
PAPER DISC SEAL W/ CLEAR LAQUER
PISTOL PRIMER CUP
BOOSTER LEAD CUP 73-1-164X
GILDING METAL
M18 DETONATOR ASSEM.
73-2-185A - GILDING METAL
COAT PRIMER W/ GREEN LAQUER

NOTE: ALL ITEMS WITH * ARE ESTIMATES ONLY - NOT GI SPECS

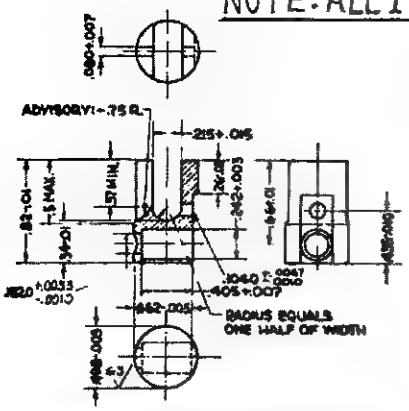

SLIDER 73-1-162C11
COMMERCIAL BRASS, ROD, COMPOSITION "B", HALF HARD
125/ ALL OVER EXCEPT AS NOTED.

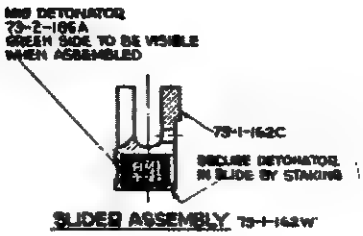

SLIDER ASSEMBLY 73-1-162W

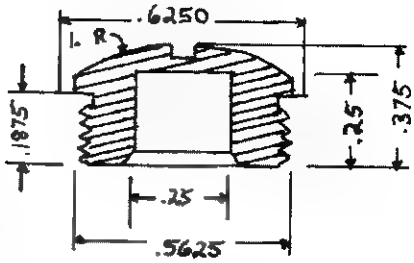

* SLIDER PLUG 73-1-163F BRASS
.5625 X 24 TPI (NON-STAN.)

* SLIDER SPRING
73-1-163H
Steel wire

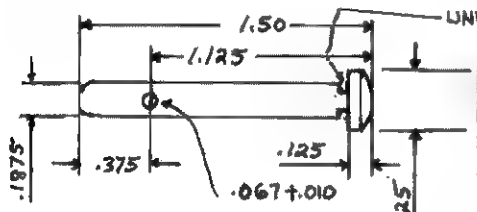

* SAFETY PIN
73-1-163E BRASS ROD

* SAFETY PIN SPRING
73-1-163G - Steel wire

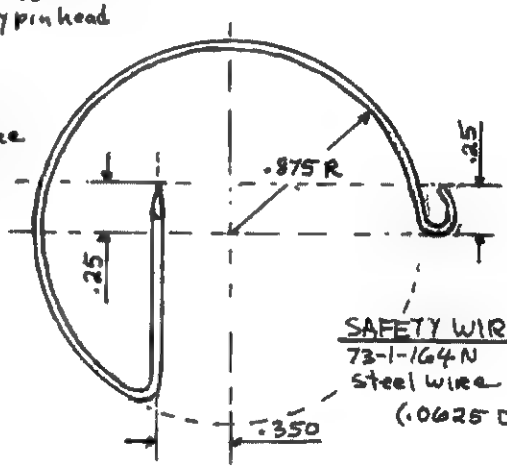

SAFETY WIRE *
73-1-164N
Steel wire
(.0625 DIA)

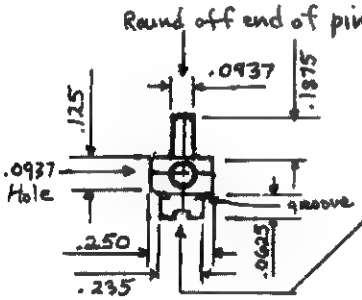

SETBACK PIN *
73-1-163-B
steel bar

Cut screwhead slot for alignment of hole after installing in fuze body

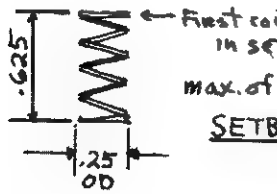

First coil should engage groove in set back pin

max. of 6 oz. for full compression

SETBACK PIN SPRING *
Steel wire - 73-1-163D

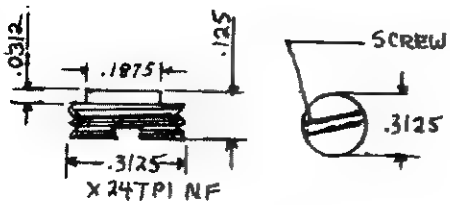

* SETBACK PIN PLUG 73-1-163 M BRASS
BRASS ROD

SEE ITEM #4 - PAGE 66

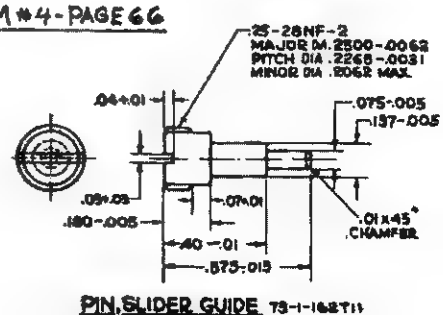

PIN, SLIDER GUIDE 73-1-162T11
STEEL, BAR, FS 1117 OR B1113, AS-COLD-FINISHED
FINISH ALL OVER 125/

WORKING PARTS FOR M 52 FUZE

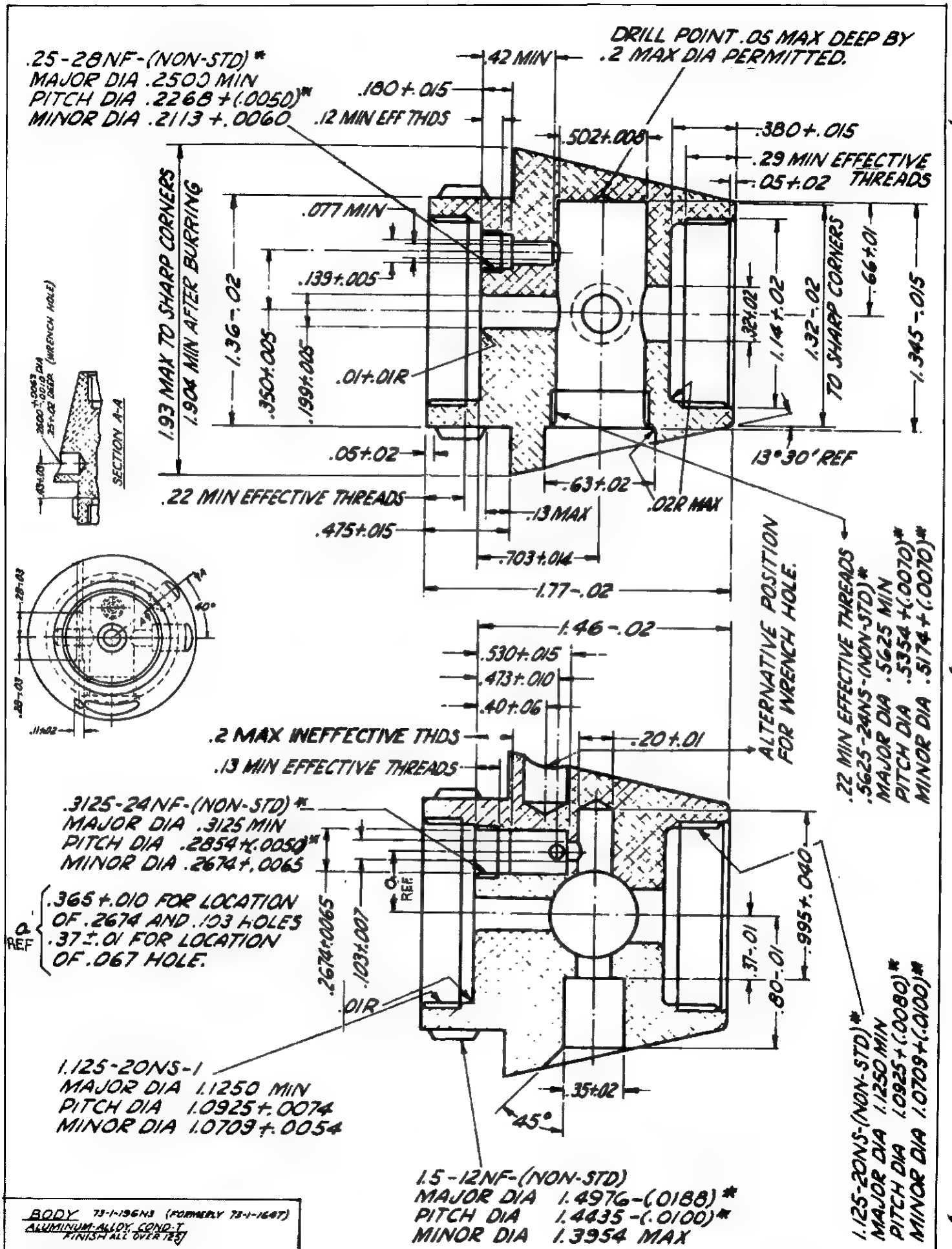

.25-28NF-(NON-STD)*
MAJOR DIA .2500 MIN
PITCH DIA .2268+(.0050)*
MINOR DIA .2113+.0060
DRILL POINT .05 MAX DEEP BY .2 MAX DIA PERMITTED.
.42 MIN
.180+.015
.12 MIN EFF THDS
.502+.008
.380+.015
.29 MIN EFFECTIVE THREADS
.05+.02
.077 MIN
.139+.005
1.93 MAX TO SHARP CORNERS
1.904 MIN AFTER BURRING
1.36-.02
.350+.005
.199+.005
.01+.01R
.32+.02
1.14+.02
1.32-.02
TO SHARP CORNERS
.66+.01
1.345-.015
13°30' REF
.05+.02
.22 MIN EFFECTIVE THREADS
.63+.02
.02R MAX
.13 MAX
.475+.015
.703+.014
1.77-.02
SECTION A-A
.2500+.0063 -.0010 DIA .25+.02 DEEP (WRENCH HOLE)
.43+.03
.28-.03
.11+.02
40°
ALTERNATIVE POSITION FOR WRENCH HOLE.
.22 MIN EFFECTIVE THREADS
.5625-24NS-(NON-STD)*
MAJOR DIA .5625 MIN
PITCH DIA .5354+(.0070)*
MINOR DIA .5174+(.0070)*
1.46-.02
.530+.015
.473+.010
.40+.06
.2 MAX INEFFECTIVE THDS
.20+.01
.13 MIN EFFECTIVE THREADS
.3125-24NF-(NON-STD)*
MAJOR DIA .3125 MIN
PITCH DIA .2854+(.0050)*
MINOR DIA .2674+.0065
a REF
.365+.010 FOR LOCATION OF .2674 AND .103 HOLES
.37±.01 FOR LOCATION OF .067 HOLE.
.2674+.0065
.103+.007
.01R
.995+.040
.37-.01
.80-.01
1.125-20NS-1
MAJOR DIA 1.1250 MIN
PITCH DIA 1.0925+.0074
MINOR DIA 1.0709+.0054
.35+.02
45°
1.125-20NS-(NON-STD)*
MAJOR DIA 1.1250 MIN
PITCH DIA 1.0925+(.0080)*
MINOR DIA 1.0709+(.0100)*
1.5-12NF-(NON-STD)
MAJOR DIA 1.4976-(.0188)*
PITCH DIA 1.4435-(.0100)*
MINOR DIA 1.3954 MAX
BODY 73-1-196N3 (FORMERLY 73-1-164T)
ALUMINUM-ALLOY COND-T
FINISH ALL OVER 125

FUZES, POINT DETONATING, M52A1, M52A1B1 AND M82 DETAILS

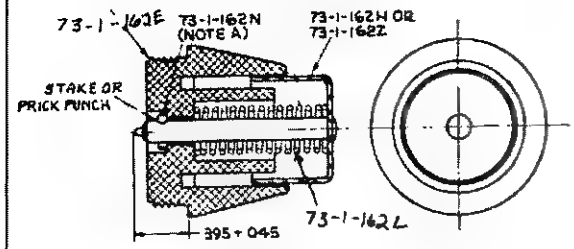

HEAD ASSEMBLY 73-1-162F10

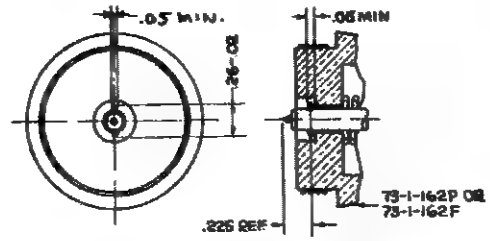

HEAD ASSEMBLY (ALTERNATIVE METHOD)

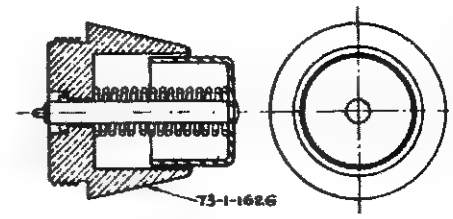

HEAD ASSEMBLY (ALT.) 73-1-162P10
FOR OTHER INFORMATION, SEE 73-1-162F

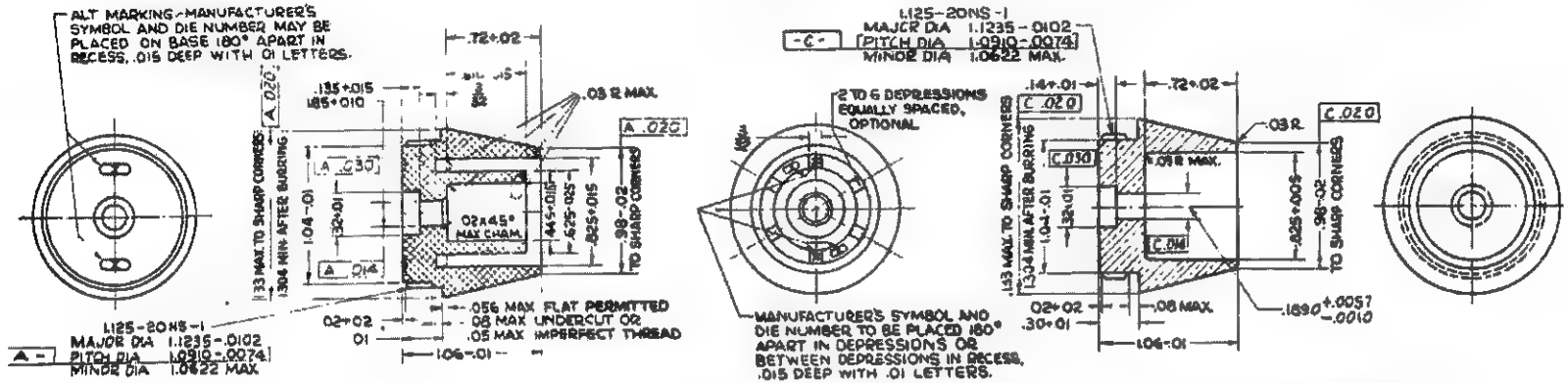

HEAD 73-1-162E11
ZINC-BASE-ALLOY DIE CASTING, COMP. A OR B, DICHROMATE FILM
MINIMUM WEIGHT, 1125 GRAINS

HEAD (ALT.) 73-1-162B11
COMMERCIAL BRASS ROD, COMPOSITION "B", HALF-HARD
FINISH ALL OVER 125

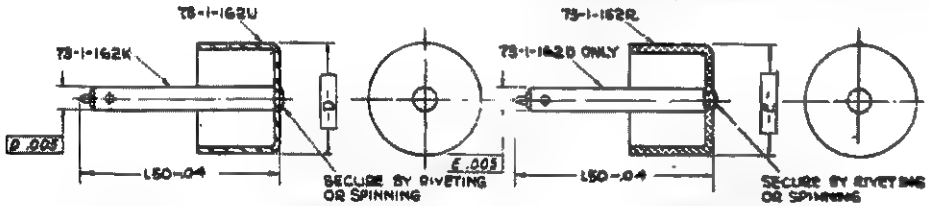

FIRING PIN ASSEMBLY 73-1-162H11

FIRING PIN ASSEMBLY (ALT) 73-1-162B14

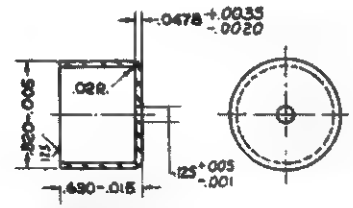

STRIKER 73-1-162U11
STEEL, STRIP, WD1010 OR WD1020 COLD-ROLLED
TEMPER NO. 4, (SOFT SKIN ROLLED) BEST 32 RMS FINISH

PIN, FIRING 73-1-162K11
STEEL, BAR, F51100 OR F51020, AS-COLD-FINISHED
FINISH ALL OVER 125

PIN, FIRING (ALT) 73-1-162D11
ALUMINUM ALLOY, ROD, COND-T
(FOR ALL OTHER INFORMATION SEE 73-1-162K)

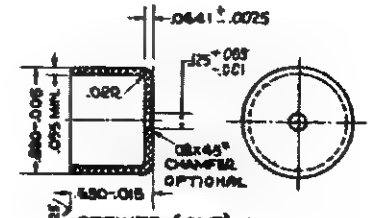

STRIKER (ALT) 73-1-162R11
ALUMINUM, SHEET, COND-A

PIN, FIRING PIN LOCK 73-1-162N11
STEEL, BAR, F51020 OR F51010, AS-COLD-FINISHED
FINISH ALL OVER 125
(NOTE A)

NOTE A: NOT REQUIRED WHEN ALTERNATIVE METHOD OF HEAD ASSEMBLY IS USED.

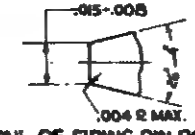

DETAIL OF FIRING PIN POINT

SPRING, FIRING PIN 73-1-162L11
STEEL, WIRE, MUSIC SPRING, .026 DIA.

REQUIREMENTS

A- SOLID HEIGHT NOT OVER .463 INCHES
B- SEASON THOROUGHLY AFTER WINDING
C- WITHIN 24 HOURS AFTER PLATING, TREAT TO REMOVE EMBRITTLEMENT.
D- LOAD AT ONE INCH = 4.188..1102. MIN.
E- LOAD AT .715 INCH = 7.188..1102. MAX. OCCASIONAL CHECK WILL BE MADE AFTER COMPRESSION FOR AT LEAST 24 HOURS AT THIS HEIGHT.
F- LOADS APPLY AFTER SEASONING, PLATING AND TREATMENT TO REMOVE EMBRITTLEMENT

ADVISORY DATA (NOT MANDATORY)

A- DIAMETER OF WIRE .039 INCHES
B- TOTAL NUMBER OF COILS = 15 ½
C- NUMBER OF ACTIVE COILS = 13 ½
D- ADJUST FREE HEIGHT TO MEET LOAD REQUIREMENTS
E- SEASON BY HEATING TO 500°F FOR 30 MINUTES.
F- REMOVE EMBRITTLEMENT, HEAT TO 300°F FOR AT LEAST 30 MINUTES, AS SOON AFTER PLATING AS PRACTICABLE.

Note: Refer to general info on M52 Fuze, Volume Two, Issue #1, pg.24. The info is reprinted from Army FM-23-85. To avoid confusion, use only the lower illustration when determining the relationship of the various Fuze components. The Army draftsman apparently flipped over the negative on the top illustration, resulting in an inside out drawing. (The Safety Pin, Spring and Setback Pin are on the wrong side.) Note also that the Safety Wire on the lower drawing is installed from the wrong side. (It's a wonder we won the war!)

FUZE, POINT DETONATING, M52A1
ASSEMBLY AND DETAILS

73	1	161

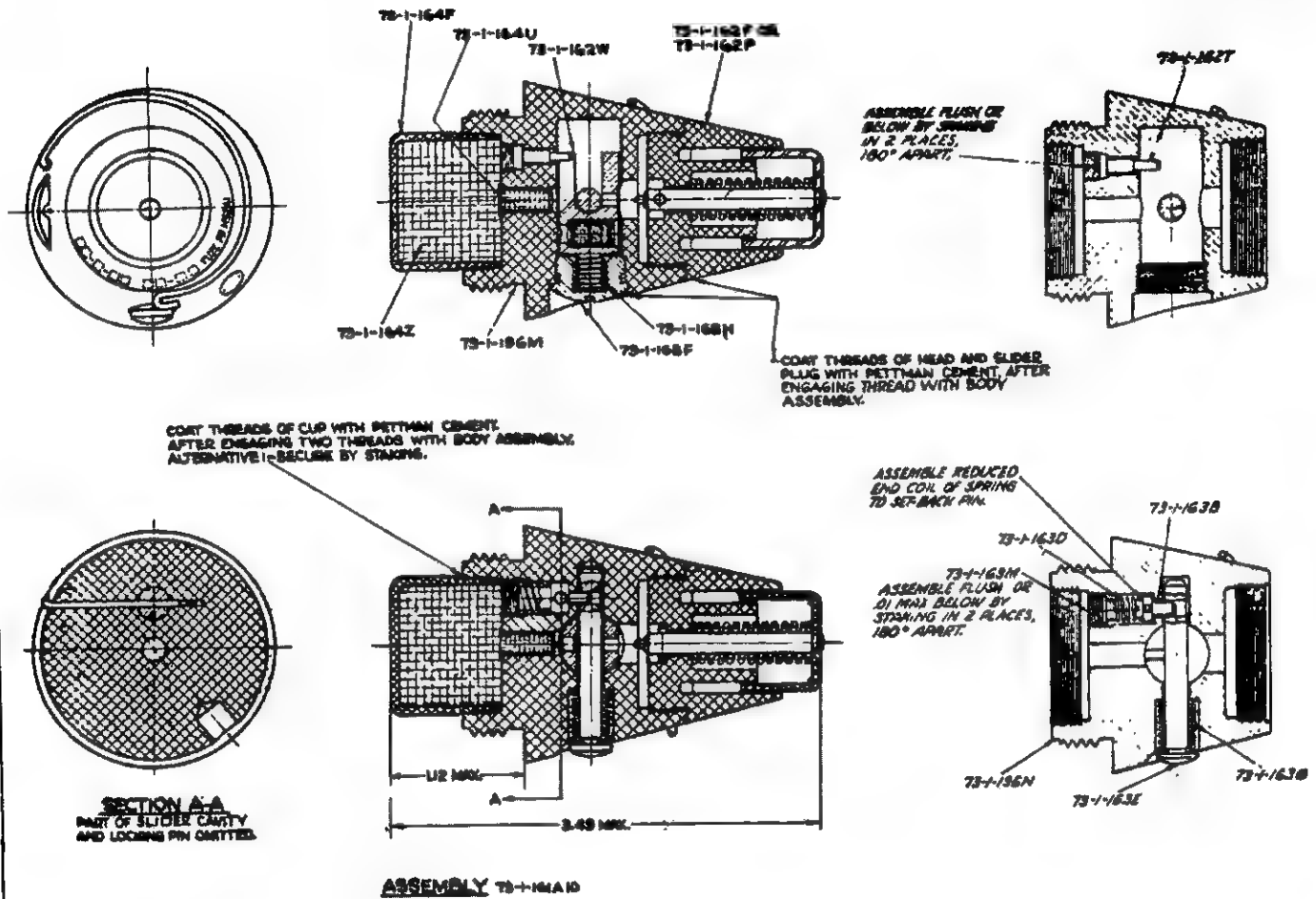

ASSEMBLY 73-1-164A1D

1. Prior to Fuze assembly, press the Tetryl Booster Lead into position through the bottom of the Fuze Body.
2. Press the Primer/Detonator, green side up, into the hole in the top of the Slider Assembly.
3. Insert Safety Pin and Spring into Fuze Body. Hold them in position until the Setback Pin, Spring, and Plug can be installed, locking the Safety Pin in place. The Setback Pin should be inserted with its hole aligned with the Safety Wire Hole. Install the Safety Wire at this time.
4. Install the Slider Guide Pin through the bottom of the Fuze Body. Note that this version, (pg.63) is a GUIDE PIN ONLY. The Slider is held in proper firing position by the Slider Spring ONLY.
5. Insert Slider, aligning the slot on the bottom with the Slider Guide Pin. Install Slider Spring and Slider Plug.
6. Apply permatex to the threads on both the Striker Head and the Booster Cup. Screw both assemblies tightly into place on the Fuze Body.
7. Remove Closing Plug from loaded Shell Body.
8. Apply permatex to the external Fuze Body threads and screw Fuze Assembly tightly into place w/Fuze Wrench. Staking Fuze in place is optional.

SHELL, HE, M49A2, W/FUZE PD M52A1 FOR 60-MM. MORTARS ASSEMBLY AND MARKING DIAGRAM

75	1	82

PAINT OVER SHELL LOT NUMBER WITH OLIVE DRAB LACQUER ENAMEL OR ENAM. THEN PRINT AMMUNITION LOT NUMBER (INCLUDING INITIALS OR SYMBOL OF LOADER) WITH YELLOW STENCIL INK.
SAMPLE MARKING:- "AMMT LOT 00-0-00"

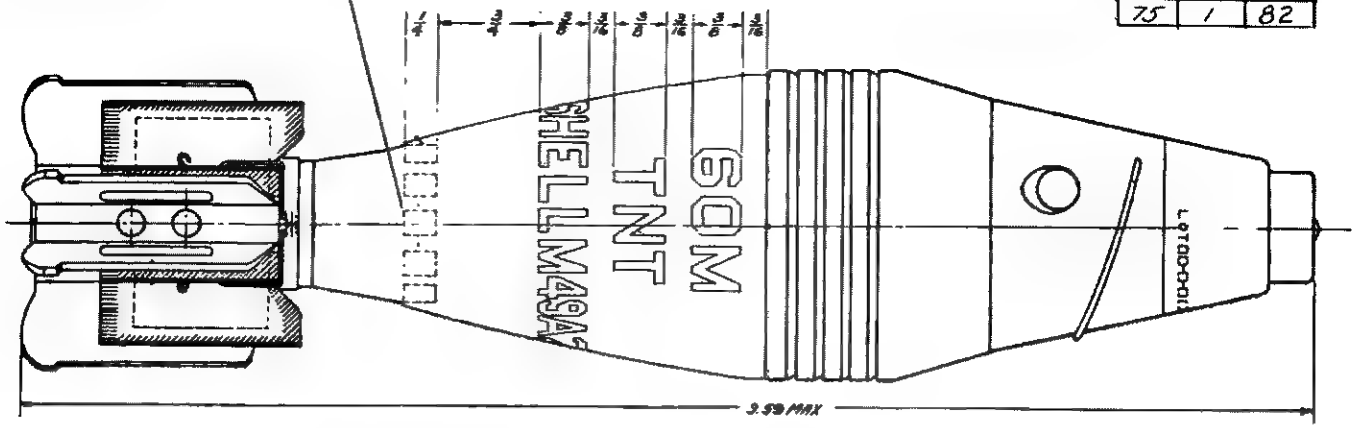

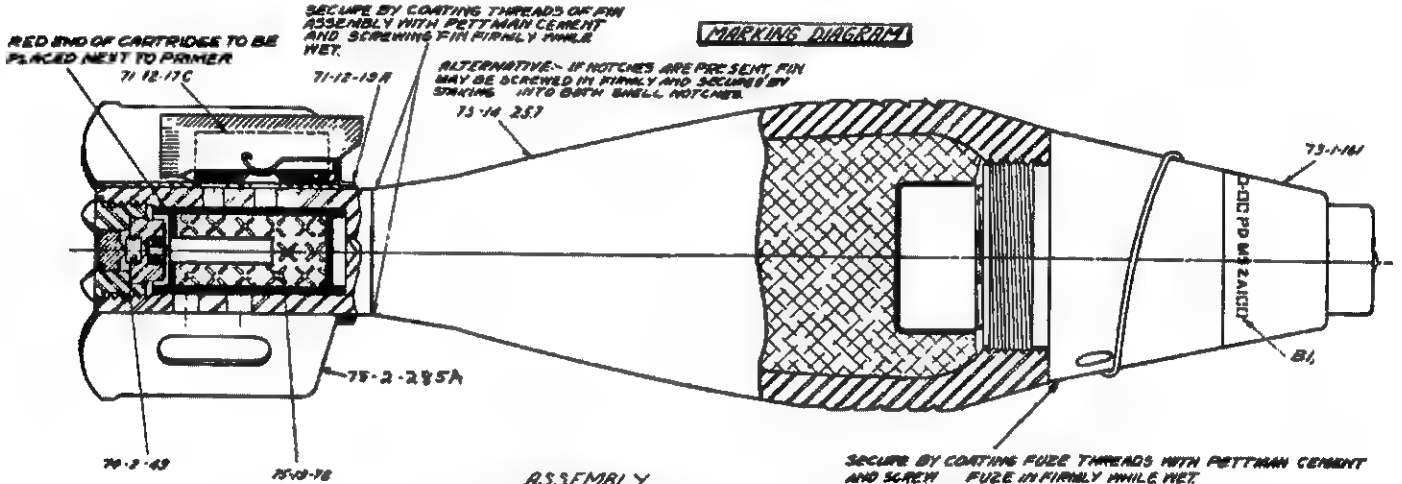

SECTION AA

ASSEMBLY
TO BE ACCEPTABLE THIS ASSEMBLY MUST FREELY ENTER ALIGNMENT GAGE

(a) ALTERNATIVE - FUZE POINT DETONATING, M52 A1 (WT - .48 LBS) DRG 73-1-188
(c) WHEN M52A1 FUZE IS USED, WT - 2.90 LBS
(e) FOUR REQUIRED, WEIGHT IS THAT OF FOUR.
(f) ALTERNATIVE - ENAMEL, GRADE 1, SPEC JAN-E-20
(g) WEIGHT SHOWN IS WITHOUT SAFETY WIRE, SAFETY PIN AND PROPELLENT CHARGE.
(h) SUBSTITUTE STANDARD PACKING.

APPROX WEIGHTS	POUNDS
SHELL, EMPTY	1.67 [illegible].06
CHARGE, BURSTING (TNT)	.34
TOTAL WEIGHT, UNFUZED	2.01
PLUG, CLOSING	.20
SHIPPING WEIGHT	2.21

CHARGE, BURSTING
APPROX .34 LB. FLAKE TNT, GRADE I
PRESSED INTO TWO EQUAL INCREMENTS OF .17 LB. FIRST INCREMENT CONSOLIDATED AT 2000 LBS. PER SQ IN. SECOND INCREMENT PRESSED AT A PRESSURE NOT TO EXCEED 5000 LBS. PER SQ IN. PRESS WITH 1.15 DIAMETER PUNCH.

SEE FILLER NOTE PAGE 56

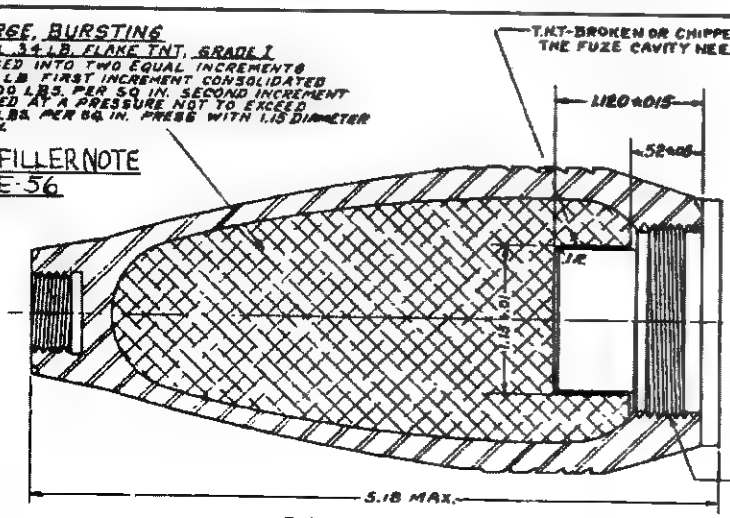

SHELL LOADING ASSEMBLY
MEAN VOLUME OF CHARGE = 7.14 CU. IN.

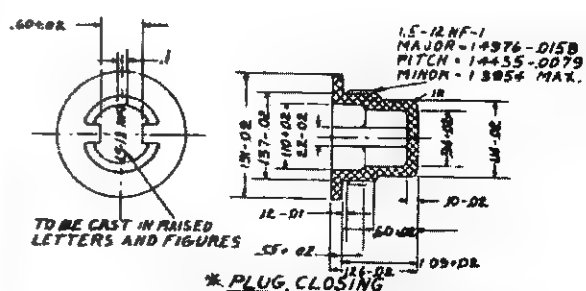

* PLUG, CLOSING
DIE CASTING, ZINC-ALUMINUM-MAGNESIUM

REMOVE CLOSING PLUG BEFORE INSTALLING FUZE ASSEM.

The following article is reprinted from "The Practical Metalworker". This excellent shop manual was published in England during the early 1900's. This was an era when many of the small home workshops were set up with facilities for simple metal casting.

At the end of the article I've included some info on a mail order firm that specializes in supplying furnaces and casting equipment to the home metal caster. A catalog of casting books, sand casting kits and supplies is also available for $2.50 from:

Caldwell Industries, Box 591, Luling, Texas 78648.

Working Aluminium

ALUMINIUM is now of such importance in the metalworking industries that special information (to which allusion has been made in the section on Materials, and which is given on the authority of the British Aluminium Company) is here given relating to methods of working it.

CASTING ALUMINIUM

Alloys.—Although pure aluminium castings do not corrode, they lack the toughness found in alloys of aluminium, and it may be stated as a fact that nearly all goods sold as aluminium are in reality aluminium alloys. The cheapest and perhaps the best hardener for aluminium is zinc; such an alloy is extremely easy to cast, possesses fair strength, and is fairly ductile. The one drawback is that it does not machine well, and to improve matters in this respect a small quantity of copper is added. It is scarcely necessary to point out that the zinc used for alloying must be absolutely pure, as otherwise undesirable qualities may be introduced into the casting.

Castings which must be gas-tight or water-tight should preferably contain an alloy of copper. Such castings are of greater density and usually possess a greater degree of elasticity than zinc alloys. Owing to the greater density they will, of course, be heavier. An alloy of 25 per cent. copper to 75 per cent. aluminium is recommended as being the best alloy for the purpose mentioned.

Casting alloys can, it must be mentioned, be obtained already mixed, and in ordering it is only necessary to state the purpose for which an alloy is desired.

Aluminium Castings in Sand.—The point of most importance is the pouring temperature, owing to the ease with which the metal may be overheated, in which case satisfactory castings are impossible. The temperature should never be allowed to rise very much above the melting point of the alloy, and dirt and oxide ("dross") should be carefully skimmed off the surface of the molten metal. When this has been done the "melt," as it is termed, is vigorously stirred and quickly poured in a steady stream.

The moulds are best made from green sand lightly rammed and faced with plumbago or french chalk. Cores are satisfactorily made from sawdust, using resin as a binding agent, which allows the cores to soften and crush as the metal cools. Hard cores often produce cracked castings because they do not contract to the same extent as the casting; it must be remembered that aluminium has a high contraction, amounting to $\frac{7}{16}$ in. per foot. As soon as possible after pouring it is desirable to loosen the moulds. Adequate fillets should be provided and thin sections avoided. Complicated castings necessitate the provision of chills whenever there are large bosses or other masses of metal in conjunction with thinner sections. Heavy vertical risers and large gates are essential to good work.

Aluminium Chill Castings.—When, to reduce machining operations, a number of castings are required of accurate size (which cannot always be obtained in sand casting, owing to fins, "gates," etc.), the process of casting in metal moulds is adopted. The same mould may be used for thousands of castings, and apart from the considerable saving in time and the avoidance of spoilt castings, the method possesses the added advantages that the parts produced possess very much greater tensile strength and ductility, and also have a smooth surface that takes a high polish easily and readily. Very little machining is required, and small holes may be cast true to size. It must here be pointed out that zinc-aluminium alloys are not frequently used for chill casting, as they tend to absorb iron from the moulds and therefore soon destroy the latter.

Moulds for chill casting are usually made of mild steel, but chrome-vanadium steel gives the best results. As it is desirable to remove the castings very quickly from the moulds, only a small allowance for shrinkage need be made.

To avoid air-locks, the position of the vents and gates must be very carefully considered. Fin spaces may be left between the die faces to act as vents for trapped air.

Moulds must always be warmed before pouring, and also lubricated (or "fluxed") with beeswax or tallow. A hot-air blast is recommended for cleaning out the moulds after every third or fourth casting.

Die Castings in Aluminium.—The main difference between die castings and chill castings is that in the former the castings are made *under pressure* in metal moulds. The rapidity of the process almost equals that of stamping in the press, although very much more complicated dies are required in die casting. Although zinc-aluminium alloys have been successfully die cast for several years, it is only recently that pure aluminium could be cast by this process.

EXAMPLES OF SMALL SAND CASTINGS IN ALUMINIUM

The examples of small aluminium castings here dealt with will chiefly appeal to the homeworker or small-business man who only occasionally requires to cast in this metal.

The melting-point of aluminium is equal to a dull red heat in mild steel, and the first essential is that means shall be available whereby a sufficient quantity of metal can be brought well up to this point. This is not such a difficulty as might be expected, particularly if one has the temporary use of a good, enclosed kitchen cooking range. Using the melting pot shown by Fig. 1, 2½ lb. of metal may be melted with comparative ease, providing that the fire be clean and stoked with small good coal.

The Melting Pot.—The melting pot is 8 in. of 2½-in. diameter ⅛-in. wall steel tube, with a ⅛-in. thick nickel steel bottom pressed in and well riveted over. The two holes near the brim are simply to receive the turned-up points of the handle shown in Fig. 2, for use when withdrawing from the fire and pouring. The handle is of $\frac{5}{32}$-in. steel rod, and is sprung together in the hand until the two points will enter the holes from inside the pot, and then released. This makes a safe and easily detachable lifting gear.

Melting.—To commence melting, the pot should be placed in the fire empty, and when the fire is low in the grate, small coal should be packed all round it so as to hold it vertical. As the fire burns through, the pot will get hot from the bottom, and when this portion is nicely red, the metal should be dropped in, in broken pieces about 1 in. cube. Do not put too much metal in at once, and if old cuttings are to be used, do not drop them in until a fair body of metal is already molten, otherwise they will rapidly oxidise and waste. Old motor-cycle crankcases make good aluminium scrap on account of their even section. When the metal is ready for pouring, a small amount of brazing borax will clean the surface and assist pouring.

A brazing hearth offers equally good facility for melting the metal, using an improvised furnace of firebrick and asbestos sheet, the flame being supplied by a fairly powerful blowlamp. If the latter

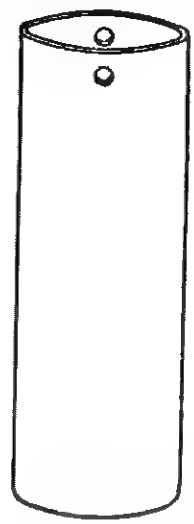

Fig. 1.—Melting Pot

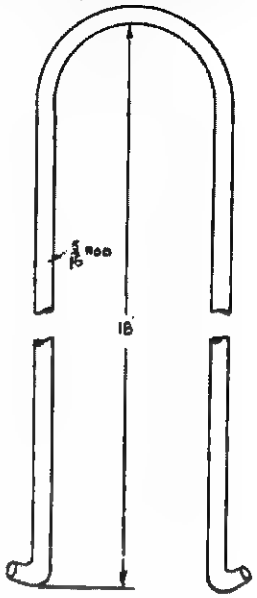

Fig. 2.—Pot Handle

method is adopted, great care must be taken not to lose the heat through cracks in the structure, and the pot should be so supported that the flame can get underneath.

method is adopted, great care must be taken not to lose the heat through cracks in the structure, and the pot should be so supported that the flame can get underneath.

The Moulding Box.—The bottom half of the moulding box is shown by Fig. 3, the other half being exactly the same, with the exception that the four locating ears are not required. The whole box is shown in section with a mould made ready for pouring by Fig. 9. The corner plates shown in Fig. 3 are necessary, because of the drying of the wood from which the box is made, whilst drying the moulds.

It is advisable to have several boxes of a size suitable to accommodate small castings if required, so that several moulds can be made and poured with one melting of metal. Particular finish of the boxes would be wasted; all that is required is that the top box shall be a good fit in the four locating pieces of the bottom box, and that where the boxes come together they shall be reasonably flat and make a good joint. Roughness of the wood inside the box assists matters rather than otherwise. It is a good plan to mark plainly the sides of the boxes that come together, so that top and bottom always bear the same relative position.

Moulding Sand.—A 56-lb. bag of finely-ground green foundry sand can be obtained very cheaply from a local foundry, and completes the equipment, with the exception of the actual patterns and such improvised tools as are necessary to make the actual moulds. The sand can be used over and over again by damping and pounding fine before or after use ; the writer keeps an old bucket for the purpose.

Patterns.—Figs. 4 and 5 are simple examples and may be cast in one box. Patterns are first made in wood, Fig. 4 from $\frac{1}{4}$-in. walnut, and Fig. 5 turned from beech, and both are arranged to taper smaller away from the joint face. All surfaces are nicely finished, and the whole coated with shellac varnish, made by dissolving flake shellac in methylated spirit.

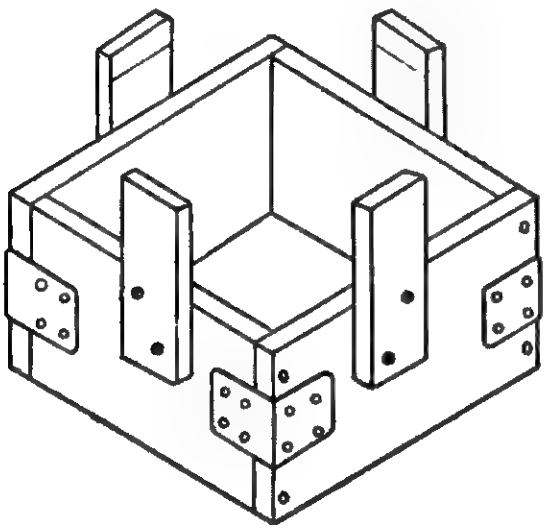

Fig. 3.—Bottom Half of Moulding Box

Moulds.—To make the moulds, both patterns are placed on a smooth bench board, joint faces downwards, and the top moulding box placed over them, the patterns being so disposed as to leave an equal space round them and the edges of the box. Sand is then fed into the box and carefully rammed down, first using the hand and finally a smooth piece of wood shaped like a pestle, surplus sand being swept off with a flat piece of wood like a strickle. After ramming, it is a good plan to rub the box over the smooth bench board to level off the sand on the front face.

Now as the whole of the patterns are contained in the top box, in these examples, the bottom box has no impression at all, but is simply rammed up with sand and the joint face flattened off with the strickle.

The patterns now require withdrawing from the sand in the top box, and this needs to be done very carefully. A good plan is to use two stout needles lightly tapped into the wood of the pattern, at a slight angle with each other. The tapping should be just enough to loosen the sand round the pattern, and then by carefully manipulating both needles between the fingers and thumbs withdrawal is made easy. If this has been successfully accomplished, there will be complete impressions of the two patterns which constitute the mould proper.

All that now remains to be done is to cut a gate in the sand to connect the two impressions, to make a hole for the metal to be poured in and smaller holes for the air to come out. The gate can be cut in the joint face of the top box with a pocket-knife and should be about $\frac{1}{4}$ in. in diameter.

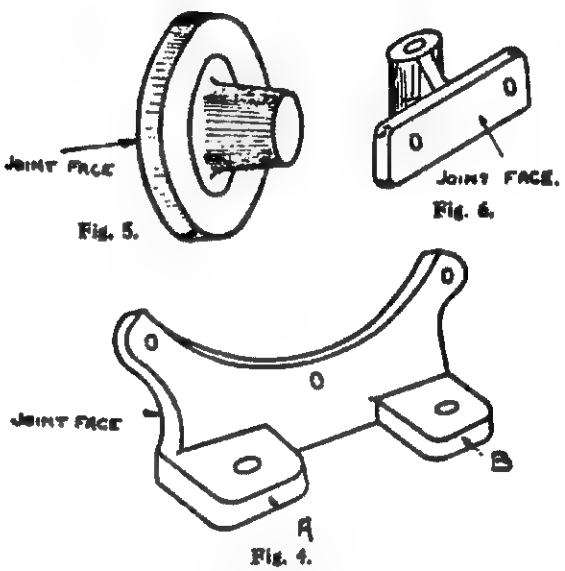

Fig. 5. Fig. 6. Fig. 4.

Figs. 4 to 6.—Three Sample Castings

Pourer and Riser.—A golden rule to observe with regard to pourer and risers is "pour in the highest point and take air from all other high points." In explanation, it will be assumed that a pourer has been cut from the top of the boss in Fig. 5 (this was actually done with a $\frac{3}{8}$-in. diameter twist-drill twisted round with the finger and thumb from the inside and made a very clean hole without breaking the mould). If no air holes or risers are provided, when the metal is poured in, air is trapped in the cavities which are to form the projections A and B (Fig. 4), or tends to rise through the pourer, and a blown casting is the result.

To obviate this danger, holes $\frac{1}{8}$ in. in diameter were drilled through from A and B in the mould in a similar manner to the pourer, to allow all air to escape as the metal flowed in. No facing was used on any of the writer's moulds, and if smooth patterns are used, none is necessary.

Pouring.—With the two boxes placed together, the mould thus described is ready for pouring, except that it must be

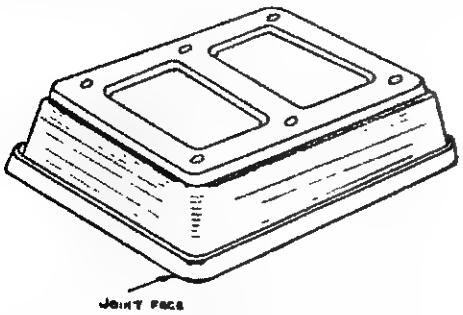

Fig. 7.—Example of Hollow Casting

dried, and at this point it must be urged that no mistake be made about the mould being dry, particularly if cores are used, for steam in a mould is worse than air. Nothing is more aggravating than to see a bubble of molten aluminium (beautiful though it may be) form on the risers or pourer of a too hastily poured mould, for such a bubble is an invariable sign of a blown casting. This is not a difficulty, however, because such a failure only occurs when the mould is damp. By making the mould one evening and allowing it to remain on top of the kitchen oven that night and all next day, with a good fire, and pouring the following evening, good results will be obtained.

Further Examples.—The example shown by Fig. 7 is rather more complicated on account of being hollow. This piece may be cast inverted in the bottom box, the hollow portion being made by sand projecting below the joint face of the top box. To do this, a smooth bench board is cut out to fit loosely between the locating jaws of the bottom box, to act as a surface to work on. The box is next in-

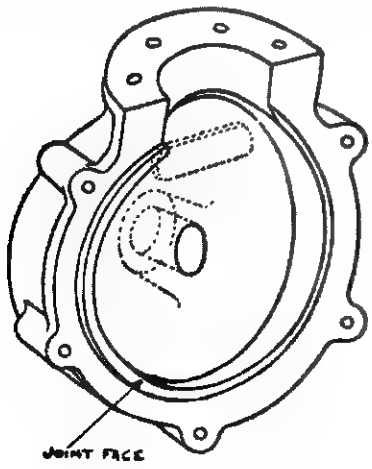

Fig. 8.—Half of Crank-case

verted, and the pattern placed centrally on the bench board joint face downwards and rammed up as before. The bench board is then removed and the sand on the joint carefully flattened and smoothed. A piece of tissue paper must next be prepared with the plan outline of the pattern on the joint face cut out. This is placed so as to cover the whole of the sand and the top box placed in position, and this in turn rammed up level and carefully removed, of course, bringing with it the upraised sand coinciding with the hollow portion of the ultimate casting. The tissue paper is then removed and the pattern withdrawn from the bottom box. Pourer and risers (eight in number) are drilled as before and smoothed off, the top box replaced, thus finishing the mould.

Fig. 6 calls for no comment, except that extra care must be taken with patterns for castings of this type, to see that they are smooth and correctly tapered.

Fig. 8 shows an aluminium crank-case,

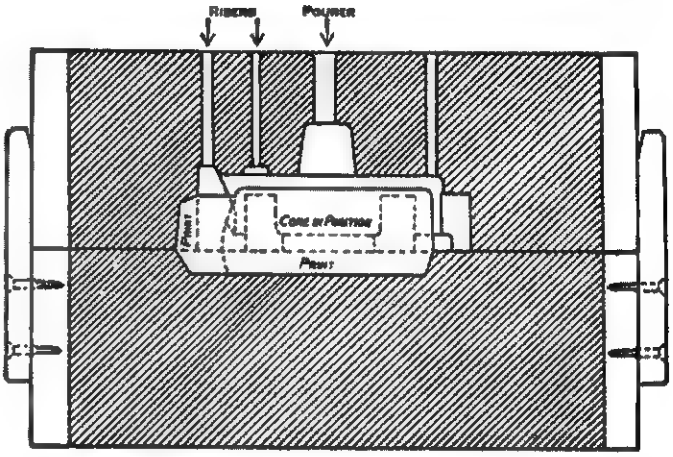

Fig. 9.—Finished Mould for Half of Crank-case

and one where a core was used. This latter method is not absolutely necessary, for it will be seen that with the exception of the open top the casting comes under the same category as Fig. 7, and may be moulded likewise; but the difficulty of making a hollow pattern is greater than making the simpler pattern and core-box demanded by the method adopted.

The mould for casting this piece is shown ready for pouring in Fig. 9, and although no illustrations are shown of pattern and core-box, yet an idea of their essentials can be formed, the pattern being solid of the same outline as Fig. 8, but with the addition of a print $\frac{3}{8}$ in. high corresponding in outline to the hollow portions. The core-box makes a hollow cavity built up in wood of the same internal contours as the hollow portions of Fig. 8, with the additional room to make the counterpart of the print on the pattern. The print is so marked on Fig. 9, and simply acts as a locating piece for the core. Fig. 9 illustrates the remarks previously made with regard to pourer and risers and needs no further comment.

Fig. 10 shows another example of orthodox design, and the method of moulding herewith described can be recommended after much trouble in making core-boxes and cores for similar pieces, both larger and smaller, than the scale shown. The illustration shows a sectional view of the assembled pattern, the finished casting, obviously a piston. A is a shell turned true inside and out and tapering larger from the top to the bell end inside, but from the centre of the bosses smaller each way outside. The two turned pieces B are fitted correctly to the inside walls. C is a length of $\frac{3}{16}$-in. steel rod to locate the bosses inside the shell.

To mould this piece, the top box is lightly rammed up without the pattern. The complete pattern is then pressed into the sand of the joint face solid end first, as far as the centre line of the steel rod. The pattern must be kept square with the face. The joint is then covered with tissue paper as before, and the bottom box inverted and placed over the top box and carefully rammed up, taking care that the inside of the pattern is nicely rammed without disturbing the bosses. The whole box is then turned over and the top lifted off, revealing the solid end of the pattern standing above

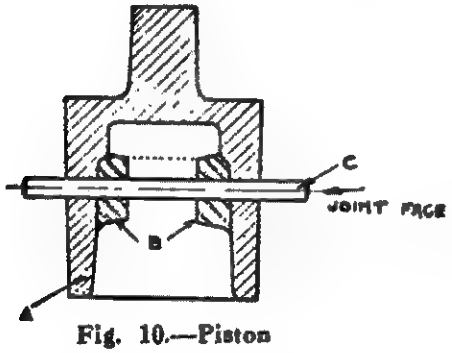

Fig. 10.—Piston

the joint face and half the diameter of the rod exposed.

The next step is to remove the steel rod, and this can only be done by disturbing the sand of the joint face; but this is of little consequence. As a matter of fact, as much as a teaspoonful should be cut away on each side.

The pattern can now be lifted out, leaving the two loose pieces constituting the bosses in position in the upstanding centre sand. These bosses must now be carefully removed, which removal is facilitated by having cut away a portion of the surface sand.

Allowing that the bosses have been removed successfully, the shell pattern should be placed back again in the mould and the joint face made up again in each box alternately and pourer and risers made, after which the mould can be reassembled for pouring.

Cleaning and Finishing Aluminium Castings.—Special cleaning or pickling of aluminium castings is seldom necessary, as they come from the mould quite white.

If the surface of the casting requires improvement a caustic soda wash is recommended. All filing should be done with a single-cut file of the dreadnought pattern.

If the castings are required to be polished, they should first be "tumbled" in a barrel. Steel balls or smooth steel punchings should be used as the burnishing agent in the tumbling barrel. For detailed information, however, on tumbling, reference should be made to the information on that subject in the section on Polishing, Colouring and Lacquering, in which also detailed instructions are given for the finishing, frosting, burnishing, etc., of aluminium.

MACHINING ALUMINIUM

Tool Edges.—Greater care is necessary in machining aluminium owing to the comparative softness of it, which tends to make the tool tear and drag. A very high surface speed (as much as 600 ft. per minute) should be employed in turning, milling or drilling this metal. Tools should have a keen oil-stoned edge; for lathe tools the clearance angle should be from 15° to 20°, and with the smaller angle about 5° top rake may be given. This requires varying according to the rigidity of the work, as with slender work there is a tendency for the tool to "dig in." Grooving tools should have a side clearance of approximately 2°.

Feed.—A much heavier and faster feed than on brass may be employed. Here again the particular alloy and the general design of the work are deciding factors.

Lubricant.—Paraffin or turps is best for general work, but turps should not be used for tapping or screwing, as the resinous deposit left behind causes the screw to bind.

Milling Aluminium.—Milling cutters for aluminium should have sharp corners, as round ones prevent a good finish. Excellent results are also obtained by the use of a built-up tool, consisting of a number of cutters inserted in a cast-iron body. The distance between adjacent cutters should be sufficient to obviate the clogging of chips or swarf, and they should only cut at the extreme edge, and not have a scraping action as with brass.

Grinding.—In grinding aluminium the pores should first be filled by holding a piece of candle up against it whilst it is running. This eliminates the need for frequent dressing and prevents the wheel from "loading" (*see* section on Grinding). Any grinding wheel may be used.

JOINTING ALUMINIUM

Riveting.—Only aluminium rivets should be used for riveting aluminium together. In the case of a row of rivets, to avoid stretching the metal, the rivets should be inserted indiscriminately and not consecutively, otherwise the rivet holes will not coincide after two or three rivets have been inserted. The rivets should be an easy fit in the holes prior to riveting, to allow the metal to spread in hammering.

ALUMINIUM SHEET-METAL WORKING

Pressing.—The power required for drawing or pressing this metal is, owing to its great ductility, much less than for other metals. Also less operations are needed for a given depth of draw.

Dies for aluminium may be of cast-iron with a hardened shell inset, and the punch may be of tool steel left soft. Drawing dies need to be carefully finished, and the surfaces must be kept brightly polished. The punch must be quite smooth and a good lubricant used, otherwise difficulty in stripping the pressing from the punch will be experienced.

Aluminium, like all other metals, hardens when pressed, but not to nearly the same extent; annealing is rarely if ever necessary. The annealing temperature, should it ever be necessary, is 650° F.

Spinning.—This process, so far as aluminium is concerned, is of importance as an auxiliary to the press. The speed of the work is tabulated below:

SPEED FOR SPINNING ALUMINIUM

Speed	*Diameter of work chuck*
500	15 in. to 20 in.
1,000	11 in. „ 14 in.
1,500	7 in. „ 10 in.
2,000	3 in. „ 6 in.

The process only differs from that used for other sheet-metals in that it is much easier to work and annealing is almost unnecessary. Vaseline should be used to lubricate the spinning tool.

The metal is, of course, worked also by other sheet-metal processes which have been previously given and which need not here be repeated.

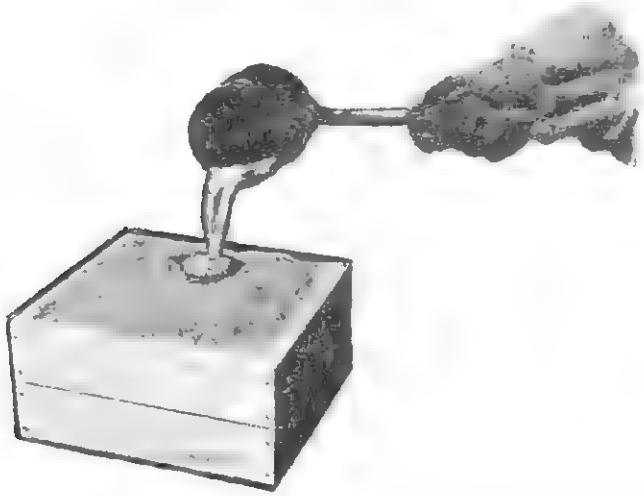

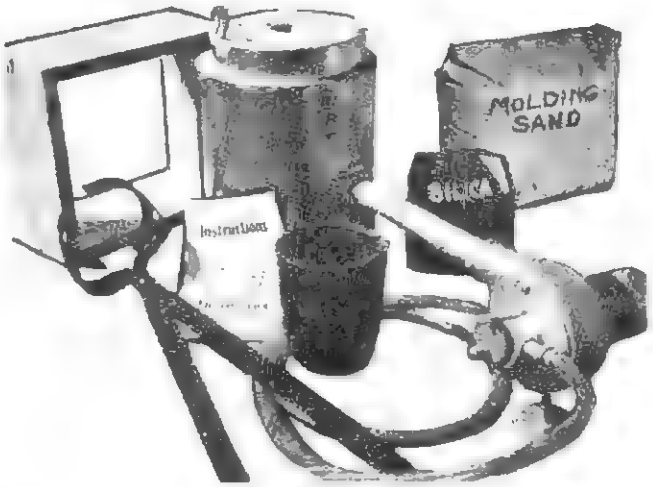

Each of the Pyramid foundry sets comes complete with furnace chamber and lid, electric motor, blower-mixer, blower tube, flexible hose, crucible tongs, flask and sand to match size of furnace set that is ordered, flour silica and a high grade silicon carbide crucible of the proper size. An instruction booklet is included which explains the operation of the furnace, and the method of making molds for metal casting. Each of the above sets is equipped with the supplies shown in the photo, except set No. 1 which is equipped with 12" assay type tongs.

Metal Capacity*	Model No.	Shipping Weight	Price of Set**
3 lbs.	1	65 lbs.	140.00
10 lbs.	4	105 lbs.	160.00
20 lbs.	8	150 lbs.	205.00
36 lbs.	10	225 lbs.	245.00
53 lbs.	16	270 lbs.	255.00

PYRAMID PRODUCTS CO.
3736 South 7th Avenue
Phoenix, Arizona 85041

PYRAMID FOUNDRY PARTS AND SUPPLY LIST

Model No.	1	Ship. Wgt.-Lbs.	4	Ship. Wgt.-Lbs.	8	Ship. Wgt.-Lbs.	10	Ship. Wgt.-Lbs.	16	Ship. Wgt.-Lbs.
Blower, motor and pipe	$ 57.00	10	$ 57.00	10	$57.00	10	$ 57.00	10	$ 57.00	10
Furnace Chamber	60.00	28	70.00	37	105.00	60	130.00	100	150.00	115
Furnace Lid	9.75	7	11.25	10	14.00	15	16.50	26	18.00	28
Tongs	3.30	1	16.00	4	17.25	5	19.25	5	20.50	6
Flasks	10.50	4	12.00	5	13.25	6	14.50	7	15.50	8
Crucibles (silicon carbide)	12.50	3	18.75	5	30.00	9	32.75	11	39.25	15

Molding Sand - 100 Lbs. - $16.50 less than 100 Lbs. - .20 cents Lb.

Parting Compound (silica) - 5 Lbs. - $4.75 Ship. Wgt. (6 Lbs.)

Flexible Vinyl Hose - .25 Cents a Foot

When items ordered from the parts and supply list are to be sent by parcel post, please include sufficient amount for parcel post charges. All heavy items on this list are sent freight charges collect.

CRUCIBLE POURING SHANK

Although not included with the foundry sets, pouring shanks provide a very convenient and safe way of pouring, especially when handling the larger size crucibles.

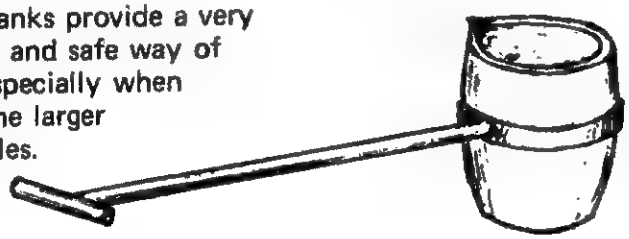

(CRUCIBLE NOT INCLUDED)

Model No.	List Price	Shipping Wt. (Approx.)
4	$ 20.50	6 lbs.
8	$ 21.75	6½ lbs.
10	$ 25.50	7 lbs.
16	$ 27.25	7 lbs.
	List Price	$ 37.00
	Ship Wt.	12 lbs.

TWO MAN POURING SHANK

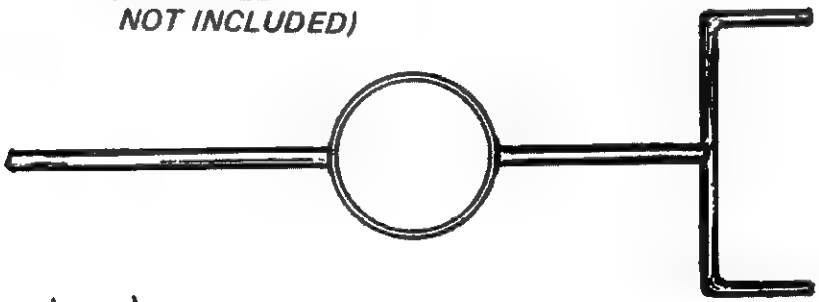

Recommended for No. 16 crucible when pouring full capacity of heavy metals. (Also available for No. 10 crucible at price shown.)

CLASSIFIEDS

$1.00 per word, $10.00 minimum. Weapons oriented ads only. No employment ads from Mercs, Foreign govts., or their agents will be accepted. No other restrictions on copy.

INGRAM SMG, semi-automatic pistol and carbine and sionic silencer parts for sale to any U.S. resident. Send a stamped & self-addressed envelope for a free illustrated price list to: SPECIAL PARTS LTD, Box 7652 Dept. PMA, Atlanta, Georgia 30357.

ELECTRONIC SPYING, LOCK PICKING, Phone Phreaking, Car Repossession, Explosives - Complete Line of PROFESSIONAL Equipment and Technical Manuals - send $1.00 (refundable) to: SEVERUS, P.O. Box 16992, Jackson MS 39211.

Military manuals list $1.00, FM 23-85 60-MM Mortar $5.00, Arm & Merchant, 1210 J Street, Modesto, CA 95354.

ELECTRIC RIFLE

THE KENTUCKY RIFLEMAN

By following the instructions below you can modify any semi-automatic rifle or shotgun to fire fully automatic and by remote control as a bonus! It's great for a car or other vehicle.

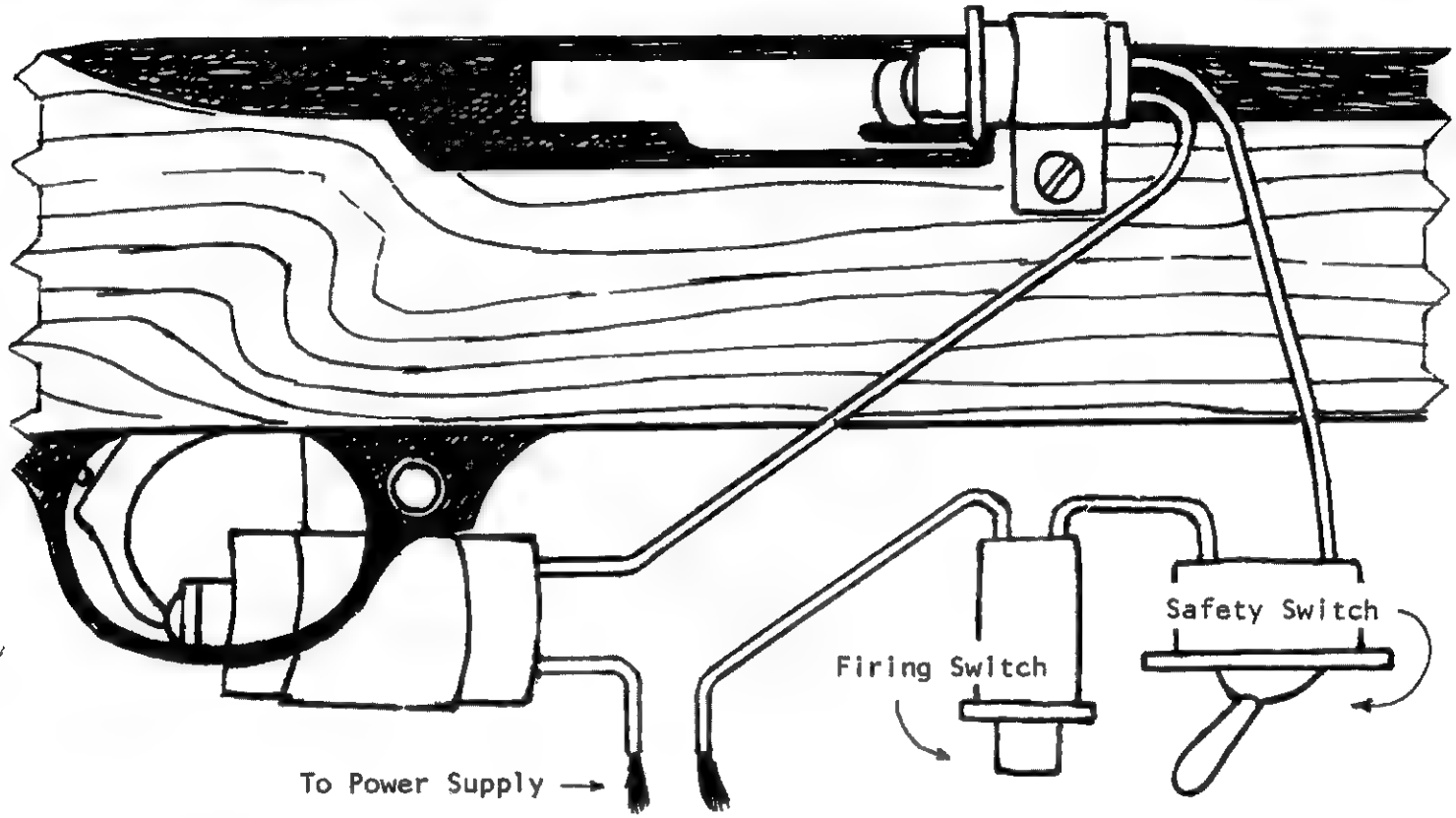

You will need the following parts:

- One 12 volt solenoid.(I used the carburetor solenoid from a Ford van)
- One toggle switch for 12 volts.(Auto supply store or junkyard)
- Two push button switches /normally off. (Auto supply)
- Steel strapping or other light metal pieces for mounting. (Hardware store)
- Misc. wire / does not have to be very heavy.
- One semi-auto weapon. (I used a Ruger 10-22, but others will work)
- A 12 volt power supply. (battery, battery charger, etc.)

Please refer to the drawings when building your system.

1. Start by making mounts for the push button switches and the solenoid from the steel strapping. The exact design will depend on the switches and solenoid you use. These mounts must be stout enough to hold the parts on the gun in the correct position.
2. The first push button switch must be mounted so that the operating lever of the rifle will push it as the action closes.
3. The solenoid has a metal extension screwed, welded or brazed to the plunger so it will push the trigger when it is activated. The modified unit is now mounted to the trigger guard assembly.
4. The toggle switch and second push switch are the controls and are mounted at your fire control center. In the drawing I show them just under the rifle,but they can be whatever distance you want (such as on the dash of the car).
5. To wire, just follow the pictures,making sure you get the switches in series.

When the wiring is completed, the toggle switch acts as a safety (it must be on for the gun to fire) and when the firing button is pressed, the solenoid will trip the trigger, causing the rifle to fire. When the operating handle goes forward, it presses the switch mounted at the front of the receiver, which causes the solenoid to again trip the trigger. This continues as long as the firing switch is held down or until the ammo runs out. Con.on pp.77

CATALOG REVIEW

by Clyde Barrow

Atlanta Cutlery - Dealers in Knives, Blades and Knifemaking Supplies.

Atlanta Cutlery is unique among knife dealers because they don't "hard sell" their own particular line. In fact, they don't even have a line. Atlanta's specialty is buying up small lots of European and Domestic knives and blades. They pass these on to their customers at very reasonable prices. Many of these items are rare, and have been out of production for over 25 years.

The knives are obtained from a variety of sources; discontinued models, manufacturers' over runs, seconds, forgotten warehouse stock and factory lots too small of advertise.

Also available are numerous styles of hand made, high quality blades from Solingen and Sheffield a complete line of Russell Green River knives and a selection of laminated steel blades from Norway. These are made up of a core of razor blade hard steel for toughness, and an outer sandwich of two shock resistant steel slabs for flexibility and break resistance.

In addition to knives and blades, Atlanta Cutlery carries pocket knife kits, books on knifemaking and knife history, metal polishing supplies, exotic woods and micarta material for handles and spacers, cutler's rivets and sheaths in both kit and finished form. Pommel and handguard materials are available in brass, white brass and nickel silver, either as bar stock or semi-finished castings. A final item of interest is

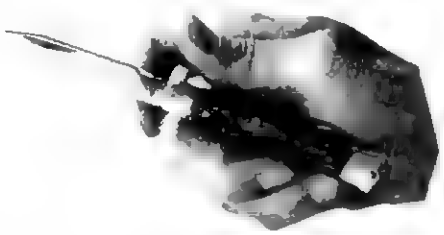

a concentrated parkerizing solution designed for use in the home workshop.

For further information contact:
Atlanta Cutlery Corp., Box 839,
Conyers, Georgia 30207.
Request a current catalog and a DEALER PRICE SHEET.

The only requirement for qualifying as a dealer is a minimum purchase of 12 (twelve) pieces per order. This can be a dozen of one item, twelve different singles or any combination in between!

This is a nice deal for readers that want to build a couple of knives or stock up on components. Pick out a couple blades; some handle, guard and pommel material, and a few sets of rivets. You will have your twelve items and at a good price too!

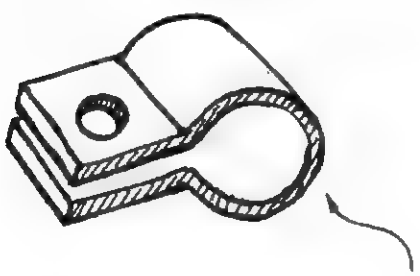

Switch and solenoid mount

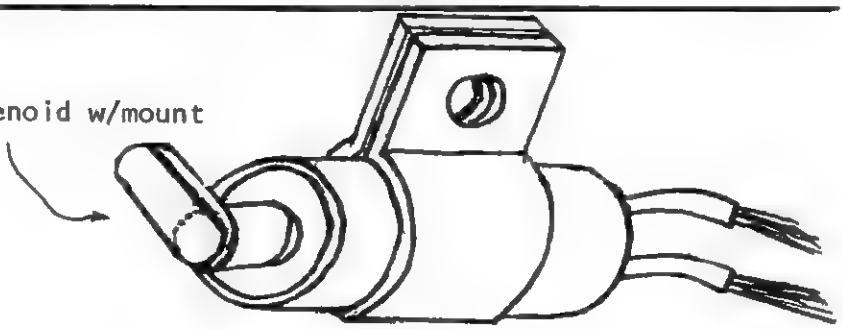

This system can be used to secure an approach to your property, such as a driveway or a ditch. You can also mount the system on a T.V. rotor and be able to change the aim. If the gun is mounted in a car or truck, be sure it is very solidly fixed and give close attention to aiming and consider the effect of the car moving.

Now you can even fire two weapons in two different directions at once!

arrow launched grenade

By Raymond J. Larner

This grenade can be used with; a conventional long bow, a compound bow, or a crossbow,' which would be my first choice

The nose and tail caps are cast using either plaster of paris or clear casting plastic.

The tail cap has a hole drilled in it to accept an arrow shaft or a cross bow bolt. The shaft or bolt should be glued in place. The other end has a hole 1" in diameter and ½" deep to seat a thin walled glass tube. The outside is reduced for a distance of ½" to allow a piece of thin walled metal or plastic tubing to be slipped over it.

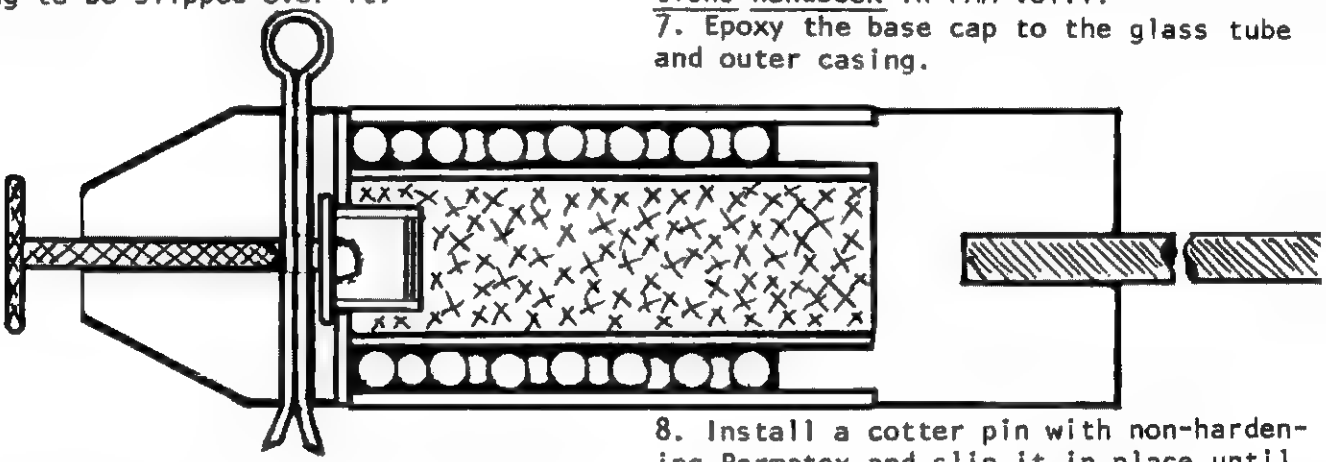

The nose cap is cast with two holes through it, (or you can cast it solid and then drill the necessary holes) to take a firing pin and a cotter pin safety. It also has a recess in the bottom to sit over the base of a .410 shotgun shell base.

The initiator is the brass base from a .410 shotgun shell. Carefully cut the shell apart just above the brass base, after first having emptied out the shot, powder and wadding. Once you have the brass base cut down, refill most of it with the powder you removed before cutting it. Use tissue paper or a thin cardboard wad to hold the powder in the brass base.

A steel washer with an outside diameter of 1½" is used to support the shotgun shell brass base. Drill out the center of the washer to accept the brass base. The rim of the brass base should be supported by the steel washer.

The outside casing for the grenade is a piece of thin walled metal or plastic tubing.

The center tube is a piece of thin walled glass tubing that has an outside diameter of 1".

To assemble the grenade:

1. Insert the shotgun shell base into th steel washer.
2. Epoxy the washer to the bottom of the nose cap.
3. Epoxy the glass tube to the steel washer.
4. Epoxy the outer casing to the steel washer.
5. Fill the space between the glass tube and the outer casing with B.B.'s, small nuts and bolts or nails.
6. Fill the glass tube with black powder, rifle powder or one of the propellant powders listed in the Improvised Munitions Handbook in PMA Vol.1.
7. Epoxy the base cap to the glass tube and outer casing.
8. Install a cotter pin with non-hardening Permatex and slip it in place until it is sitting on the safety pin.
10. Epoxy the complete grenade to the end of an arrow or bolt.

DANGER NOTE: Make sure the hole for the firing pin is a snug fit. If it is too large, the Permatex may not hold the firing pin in place when you launch it, possibly causing the grenade to explode in your face when you fire it.

The firing pin is a piece of steel rod 1/8" in diameter with a 3/4" OD washer epoxyed or soldered to the end. Make sure the firing pin extends far enough past the end of the nose cap so that it will hit the shotgun shell primer when you hit your target.

Remember that this grenade has to hit something fairly solid to be set off. If shot into sand or mud, it may or may not explode. It would probably be set off if it hit a human or animal, but only if there was plenty of force pushing it.

Make sure that your arrow is long enough for you to come to full draw without having the grenade hit the bow.

60mm Mortar
part 3 BY CLYDE BARROW

Barrel Assembly

Piece A - Base Cap - Bottom Section
- 3.25"ODx1" steel plate

Machine to dimensions shown. Drill a .653" diameter center hole and tap for a 3/4x10 TPI bolt. Grind or machine the two 30° bevels as shown. Top bevel is for fin clearance.

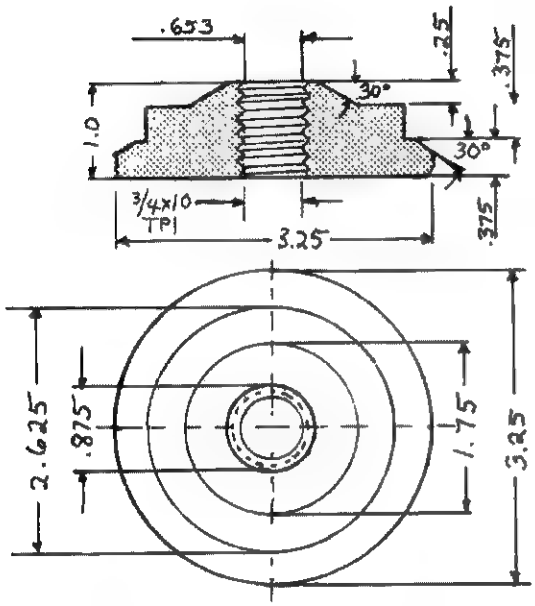

Piece B - Base Cap - Sleeve Section
- 3.25"OD x 2.625"ID seamless steel tubing.

Cut to length, square and deburr ends. Cut 24 TPI in the first 1.75" of the inside. Grind or machine the 30° bevel on the bottom edge as shown.

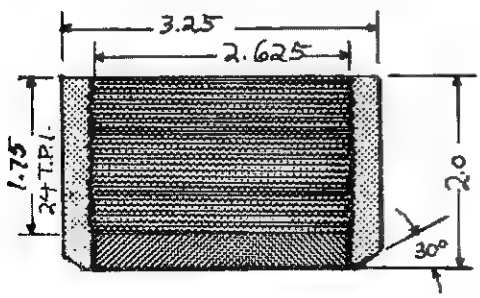

A-B - Assembly

Hammer or press bottom piece into sleeve section. Arcweld 360° around the 60° groove. Grind the weld flush w/sleeve surface. Heat treat or case harden completed base cap if possible.

Piece C - Trailer Hitch Ball
- 1.875" dia Ball w/.75" x 10 TPI threaded shaft.

Cut shaft to 1.0" long. Drill .089"dia. hole, .25" deep, in center of shaft end. Tap the hole for a 4-40 screw. If shaft is hardened, spot anneal end before drilling and tapping.

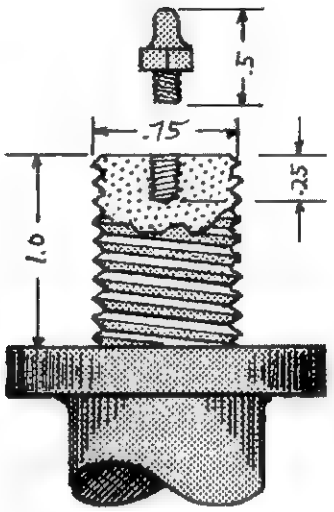

Piece D - Firing Pin

Weld a nut in place on a .5" section of 4-40 machine screw and finish piece as shown. Harden pin by heating until red and quenching in oil (not water). Polish until shiny, reheat until blue and requench in oil. Install firing pin in shaft end of Piece C. Note: Firing pins break, so make several extras. Remove broken pins by unscrewing Ball Assembly from the rear of the Basecap.

Note: Basecap should never be removed from Barrel.

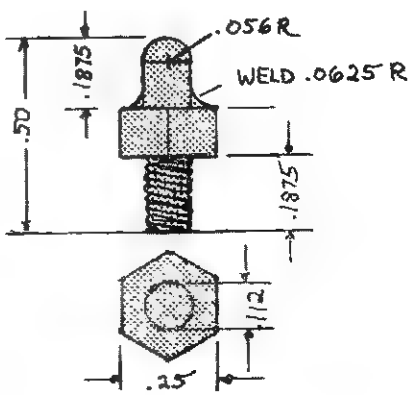

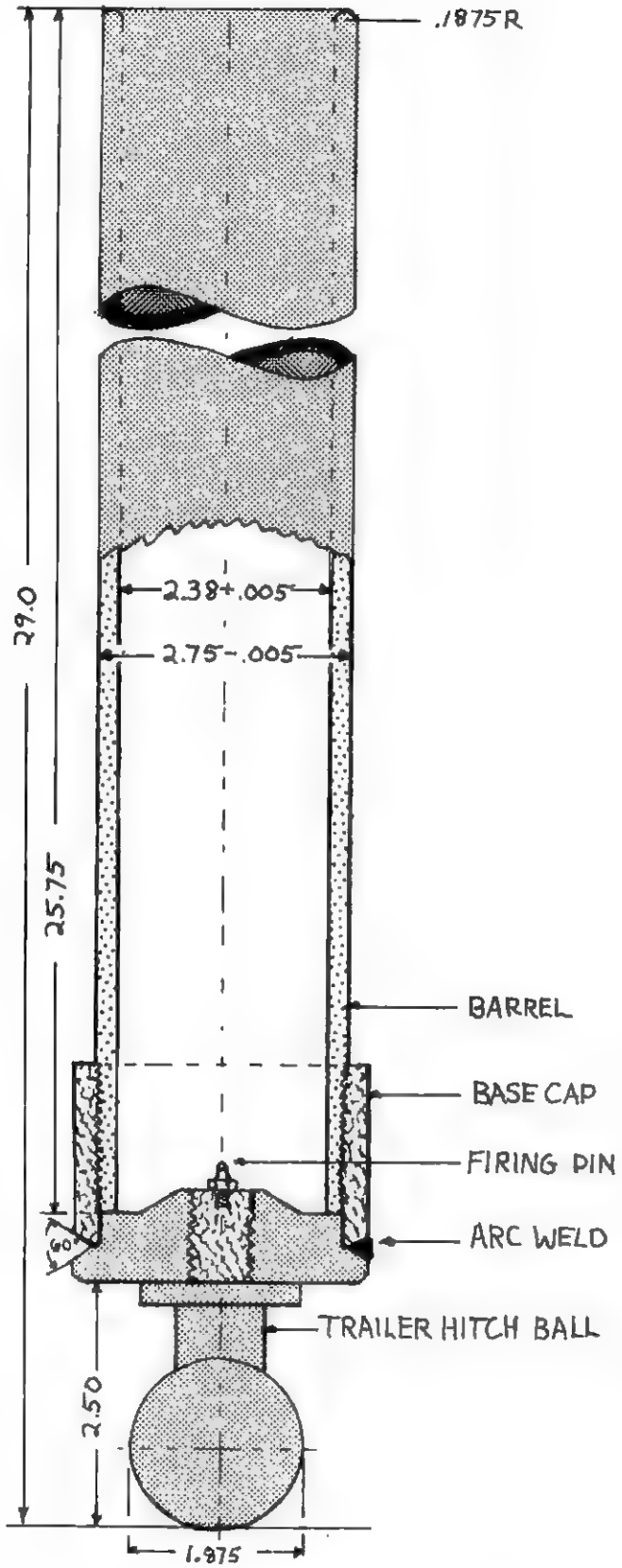

Piece E - Barrel - 2.75"OD x 2.375"ID x 25.75" long.

Material is cold drawn seamless mechanical tubing or similar high quality seamless steel tube. Use an inside micrometer and an auto engine cylinder hone to enlarge and polish the bore to 2.38" + .005". This is CRITICAL and is the most important operation of the entire project. Inside mikes and cylinder hones are available from local equipment rental shops. Cut the tube to length, square and deburr ends and crown the muzzle (.1875" half round). Thread 1.75" of the base end of the barrel w/24 TPI outside threads. Heat treat or case harden the finished barrel if possible. This will increase strength and reduce wear. Screw the barrel into the basecap (assembly A-B). Paint the outside of the completed assembly w/ olive drab enamel.

— Note: Do Not Paint the Inside of Barrel!

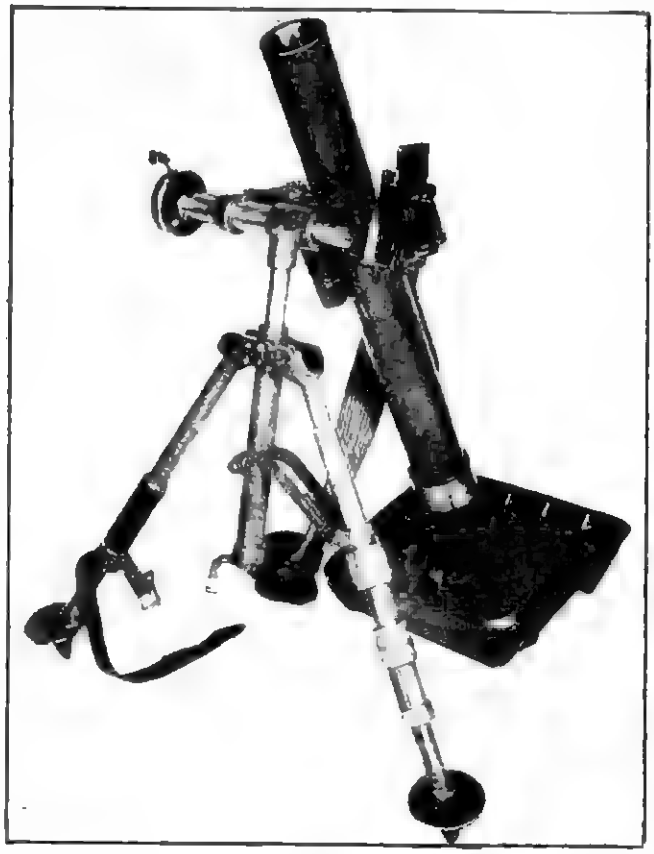

Barrel Cover - Carrying Strap

This assembly consists of a leather cap that resembles the dice cups used in bars, a canvas and leather strap and a steel clip. New GI Surplus cover assemblies are available from:
S & R Co., RD 2, Box 71, Arkport, New York, 14807. Price is $1.00 plus shipping.

ATENCIÓN GRINGO

For GOLD & GLORY

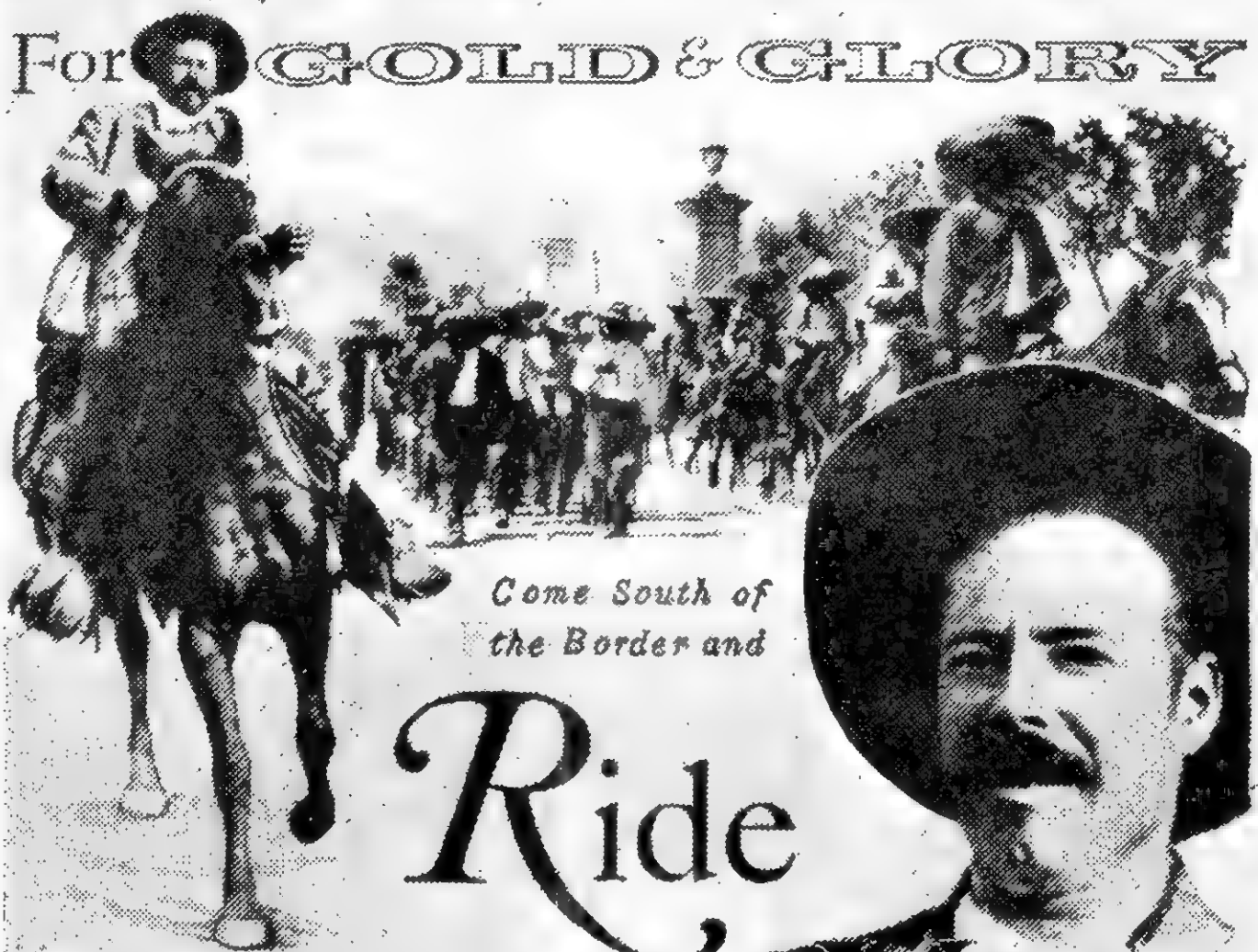

Come South of the Border and

Ride

With PANCHO VILLA

El Liberator of Mexico!

WEEKLY PAYMENTS IN GOLD TO

DYNAMITERS ♦ MACHINE GUNNERS ♦ RAILROADERS

Enlistments Taken In Juarez, Mexico

♦ January 1915 ♦

VIVA VILLA! VIVA Revolución!

You don't see mercenary job offers like this anymore!

VOLUME 2 NO.3

Published By
THE POOR MAN'S ARMORER
P.O. BOX 586, EUREKA, CAL. 95501

©Copyright 1980

The Only Magazine Of Improvised Weaponry

Compiled and Edited By
Bonnie&Clyde Barrow

Popular
Mechanics
1937

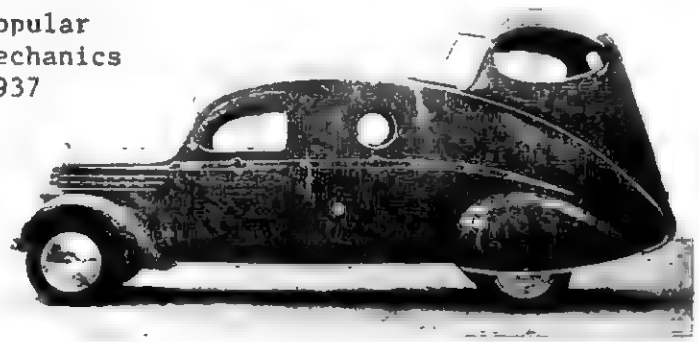

Guard on armored car has clear view in all directions from "conning tower" at rear which has dual ignition switch and brakes for emergency control

Money Car with Gun Turret Has Bullet-Absorbent Walls

From the "conning tower" atop a streamline armored car used by a Los Angeles bank, the guard can maneuver his machine gun through a 360-degree range of fire. There are loopholes for firing beneath the bullet-resistant windows on three sides; in front, two more loopholes provide the guard in the turret with a clean sweep of the sides so that no bandit could creep up to the driver's door. The outer shell of the entire car is made of soft steel to absorb gunfire and protect bystanders from ricocheting bullets; inside there is a two-inch insulating layer to check the force of bullets, and then an inner metal shell of bulletproof steel. The car is divided into three compartments—the driver's, the center storage section for valuables, and the turret. Telephones connect all three compartments. In the turret there is a dual ignition switch and brake lever so that the "rear guard" can partly take control in an emergency. The loopholes have sliding doors and the compartments can be sealed to withstand a gas attack for at least a half hour. Equipment includes guns, hand grenades and gas bombs. The bullet-proof glass in all windows is an inch and a half thick.

"Ship" Ventilators on Cab Cool Off Truck Driver

Bullet-resistant windows gave a truck driver a sense of safety after several hijacking incidents, but they also made the cab unbearably stuffy and hot. So the driver installed "nautical" ventilators in the roof. Two elbows of stovepipe were set over the cab like the air vents on a ship's deck, and were provided with caps which could be closed easily from the inside.

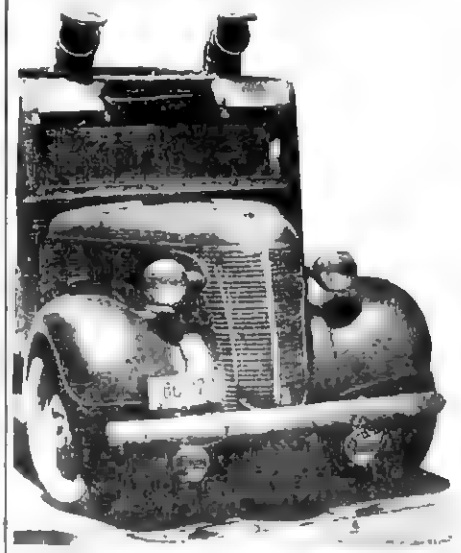

Truck driver took a tip from ocean liners and installed stovepipes to bring fresh air into cab

PLEASE NOTE
Statement of Policy

We at the Poor Man's Armorer Magazine research, write, buy and sell information only. We do not buy, sell or manufacture weapons. All info in PMA is legal to possess, print, sell and send through the US mails.

All data is obtained from sources believed to be correct. The accuracy of any and all of the material in PMA cannot be guaranteed.

If you plan to build weapons, you should obtain copies of federal, state, and local weapons laws from the appropriate agencies, the local library or your attorney.

It is the sole responsibility of the reader to determine legality before building.

The Poor Man's Armorer Magazine and all contributors will not be responsible for any injuries or property damage that may result from the use of information or ideas found in PMA.

Letters to the Editor

Dear Clyde.

Do you have any suggestions for a person like myself, one who has barely any knowledge whatsoever of the art of gunsmithing, on giving his M1A (M14)selective fire or automatic fire power? I would appreciate it.

Also, what is the largest magazine that can be used for the Ruger 10/22,how many rounds does it hold and where could I get some. Thank you, S.P.

New York

Dear S.P.,

I stongly suggest that the M1A/M14,as well as any other .308 caliber rifle be left in the semi auto mode. Short bursts of full auto fire from an SMG are fine in the 0-100 yard range, but the 100-800 yard area for which the .308 is intended is best handled by aimed semi auto fire. As an experiment, engage a man sized target at 100-200 yards. Firing from sandbags or a bipod, shoot an entire clip as fast as possible. You'll be surprised at how few rounds hit the target. Full auto would be about half as accurate.

There are only 2 magazines available for the 10-22. First of course is the factory clip. These are probably the most foolproof rifle magazines available. They feed 100% of the time, and are easy to carry in a shirt pocket. Each holds 10 rounds. The fact that they fit flush with the bottom of the action makes them the obvious choice for moving through heavy brush or for prone shooting.

The other magazine is a "banana clip" with a 25 round capacity. These are non Ruger, and are produced by the Condor Co. Address is: **KEN'S GUN CENTER, INC.**

4910 W. North Ave. Milwaukee, WI 53208

Retail $24.95. Price per each $19.95, Lots of 10 $16. All Prepaid.

The Condor is well made and functions flawlessly, although the manufacturer suggests, and I agree, that the chamber mouth of the 10-22 be chamfered with a scraper or fine file to insure that all rounds will feed correctly. As an added feature, each Condor clip carries one male and one female snaplike area. This allows two clips to be joined into a 50 round unit.

Clyde

Clyde,

I have an AR-15, which I decided to convert to full auto with M-16 parts and the Auto-Sear as advertised in Shotgun News.

I installed the M-16 parts and was waiting until I had the $70 to order the Auto-Sear. On impulse, I fired the rifle, first in semi auto and then flipped the selector to the third position, which is full auto on the M-16 and should be nothing on the AR-15. Man, was I surprised.It went full auto, not runaway, but a controlled burst. I switched several times from semi to full and the gun functioned smooth as anything. All of this without any machining, Auto-Sear, or gadgets at all.

The M-16 parts are new, as is the gun, so what goes on here? Just think, any AR-15 can be made into an M-16 selective fire by using the following parts: M-16 trigger sear, hammer and three position selector. Is this a fluke or what?

A Reader

Ed Note: If the above worked on all AR-15's, someone would have stumbled upon that fact long ago. Therefore, there must be certain batches of Colt AR-15 receivers around machined to M-16 specs. Does anyone out there have further info on this?

EXOTIC WEAPONS: AN ACCESS BOOK *by Michael Hoy*

NOW AVAILABLE: The all-new, bigger and better than ever edition of EXOTIC WEAPONS: AN ACCESS BOOK, the ONLY book that tells YOU where and how to buy or make all sorts of exotic weapons. Here are just a FEW of the weapons in this amazing new book: *switchblades, stun guns, bolas, medieval weapons, shockers, blackjacks, boomerangs, whips, tranquilizer guns, hand catapults, blitzlights, tasers, gas masks, primitive weapons, olfactory weapons, sonic weapons, brass knuckles, sword canes, slurp guns, oriental weapons, crossbows, gatling guns, night vision devices, machine guns, body armor, silencers, and much more!*

- More than 90 different weapons described and illustrated, with dealer listings for each weapon!
- Sources for not only the actual weapons themselves, but also for books, periodicals, plans, organizations, and other information on personal weaponry!
- More than 120 photographs and numerous drawings!
- A section on improvised and miscellaneous weapons!
- Complete names and addresses of more than 300 dealers!

EXOTIC WEAPONS: AN ACCESS BOOK is over 90 large 8½ x 11 pages, crammed with information on where and how YOU can buy more than 90 different weapons! More than 120 photographs, and names and addresses of over 300 dealers in a well-organized and easy-to-use format make EXOTIC WEAPONS: AN ACCESS BOOK the most complete weapons shopping guide ever written! ORDER YOUR COPY TODAY!

For your copy of EXOTIC WEAPONS: AN ACCESS BOOK, send $6.95 + $1.00 shipping to: Loompanics Unlimited, Box 264, Mason, MI 48854.

Letters to the Editor

Bonnie & Clyde,

Your magazine remains consistently informative, however I have a suggestion on your night fire problem. Rather than waste all that space on the purchase and/or construction of night sights and scopes, I'd like to see a good article on the construction of "tracer bullets" like the type used by Uncle's armed forces. With this type of ammo the soldier need not be able to see his sights or have a night scope because he doesn't aim his weapon, instead he simply adjusts his line of fire. I've experimented with drilled out bullets packed with flash powders and papers, but most of my trials have been unsuccessful. Perhaps a reader with better facilities could come up with some sort of functional night ammo.

The Mad Ratter

Dear Mr. Barrow,

I have come across some specialized information that might be of use to your readers:

J.H. Trager, POB 23174, Detroit MI 48223 is offering an M-16 Receiver Blank for about $75.00. A catalog is available for$2. As you well know, M-16 parts are easy to come by. Just think, an M-16 at your disposal without any knowledge from local/federal authorities!

Also, Armex International offers automatic weapons kits minus receivers that are advertised in Shotgun News. Among these weapons are Walther MPL SMGS and Browning Auto Rifles. What we need is some technically minded individual to come up with receiver blanks that can be easily finished and not just blueprint drawings. P.C.

Chicago

Good idea! Anyone producing receiver blanks or similar "almost finished ordnance" should submit samples for review.

J.H.Trager also sells M10/M11 front suppressor tubes These must be ordered as FLASHLIGHT BODIES -7"or 5",@$25 ea postpaid. Ed.

PALADIN PRESS

AUTOMATIC & CONCEALABLE FIREARMS DESIGN BOOK VOL. I

An astonishing collection of automatic and concealable firearms designs, available only from Paladin. Ten weapons are presented, seven of which are totally improvised. The others involve the modification of common semi-auto rifles (Squires-Bingham 22, and the AR-7) to function on **full automatic**. A fine resource book for hobbyist gunsmiths and machinists everywhere. Weapons presented also include The Slinger, Special Silenced Weapon, Mini-Shotgun Pistol and five more. 8½ x 11, 40 pp illus., softcover **$12.00**

Black Medicine II: WEAPONS AT HAND by N. Mashiro, Ph.D.

Weapons at Hand presents 112 parts of the body that are natural weapons, largely because they are very injury resistant. Also suggested are more than 180 deadly makeshift weapons—all improvised from common items—that can save your life in a crisis. Illustrated with 50 action photos. 5½ x 8½, softcover, 88 pp. **$8.00**

AUTOMATIC & CONCEALABLE FIREARMS DESIGN BOOK, VOL. II

Ten new firearm designs, including selective fire modification of the Colt 45 1911A1, the Heckler & Koch 91-93, and the Winchester Model 84 .22. Other unusual improvised weapon designs for the home gunsmith or machinist include the Revolver knife .22 Knuckle Gun, 12 Gauge shotgun Pistol, Mini .22 Magnum Front Bolt Action Shotgun, .22 Short Mini Machine pistol, and two more. The high quality drawings are all done to scale so that templates may be traced from most of them. 8½ x 11 softcover photos and diagrams. 58pp **$12.00**

HOME WORKSHOP GUNS I: "The Submachine Gun"
by Bill Holmes

Provides all the information you need to build a submachine gun in your home workshop using improvised materials and machining methods. Explains step-by-step how to build each component of your weapon, then heat treat and blue it. 5½ x 8½, 140 pp., illus., softcover **$6.00**

HOME WORKSHOP GUNS II: "The Handgun"
by Bill Holmes

Now available, the long awaited sequel to Holmes' first book **The Submachine Gun**. Included are two complete firearms designs, one for a semi or fully automatic pistol, the other for a single-shot, falling block handgun. As with the first volume in this series, the author has written in a clear, simple style and provided photos and working drawings of each component needed to build the two handguns. 5½ x 8½, 140 pp., illus., softcover **$6.00**

IMPROVISED MODIFIED FIREARMS
Two Volume Set

This fantastic two volume set features photographs of some of the most unusual firearms ever seen. Each volume contains hundreds of photographs collected from police and government files. Firearms experts, collectors, terrorists and criminals from around the world. Both books, over 280 pp., over 300 illustrations. **The Set: $17.95**

OTHER FASCINATING TITLES

- **Black Bag Owner's Manual I: "Spookcentre"** ..... **$ 6.00**
- **Silencers, Snipers, And Assassins** **$15.95**
- **Special Forces Handbook** ..... **$ 5.00**
- **The Complete Book Of Knife Fighting** **$10.95**
- **Underwater Demolition Training Manual** ..... **$ 9.95**
- **Silencers For Hand Firearms** ..... **$ 9.95**
- **Deal The First Deadly Blow** ..... **$ 9.95**
- **Assassination, Theory And Practice** ..... **$ 6.00**
- **Special Forces Operational Techniques** ..... **$ 9.95**
- **The Quiet Killers** ..... **$ 5.00**
- **OSS Sabotage And Demolition Manual** **$12.95**
- **Unconventional Warfare Devices and Techniques** **$10.00**

DEALER INQUIRIES INVITED

PALADIN PRESS
PO Box 1307—PMA
Boulder, CO. 80306

Send $1.00 for latest 1979 PALADIN CATALOG!

Catalog free with any order.

Please send me the following titles:

_____ _____

_____ _____

_____ _____

_____

Please include $2.00 for postage and handling.

NAME _____

ADDRESS _____

CITY _____ **STATE** _____ **ZIP** _____

Torch and Lathe Team Up to Spin Hard Metal

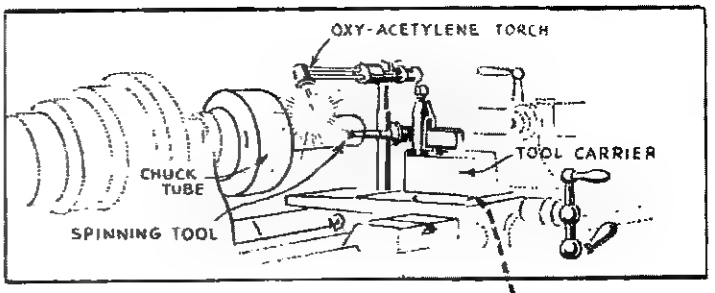

Metals as hard as nickel-steel, steel, copper and aluminum can be spun into shape on an ordinary lathe by the use of the oxy-acetylene flame. The method promises great savings to machine shops in fabricating parts from drawings, eliminating die work, casting and other processes. It may find special usefulness in making airplane parts.

Photo and diagram show how oxy-acetylene flame is focused where spinning tool works metal. Below, some hard metal products spun in this way

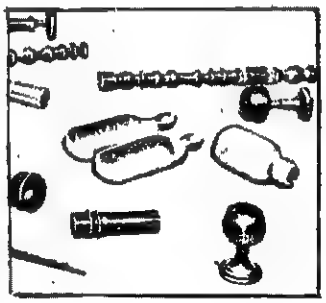

The lathe is geared up to at least 3,600 revolutions per minute. An ordinary spinning tool is placed in the lathe, tubes of the desired metal are placed in the chuck and a fine oxy-acetylene flame is focused on the point where the spinning tool is pressed against the metal. The torch is geared to the same carrier as the spinning tool, and so moves with it automatically. Perfectly round balls of hard metal, sealed at both ends, can be made in this manner.

Follow Rest Supports Lathe Work

Mounted in the tool holder, this follow rest is effective for supporting slender work in a lathe. The rest consists of a ½-in. square steel arm bent to the shape shown and tapped at the outer end for an adjusting screw. The latter is turned down at the end to fit a hole drilled in the center of a short section of angle iron, which supports the work.

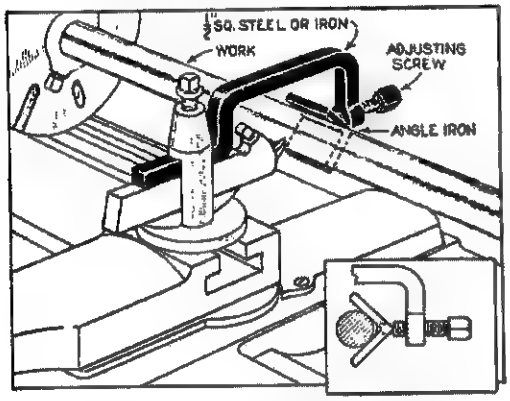

This Rest Moves Along with the Turning Tool on the Opposite Side of the Work

Slotting Pins in a Lathe

In a small shop where there was no milling machine, this jig was used in a lathe to slot the ends of a number of steel pins. It is a piece of round steel having four equally spaced slots cut to a depth equal to a little more than one-half the length of the pins, and just wide enough to take them snugly. The pins are held tightly in the slots by means of disks A, which are bolted in place as shown.

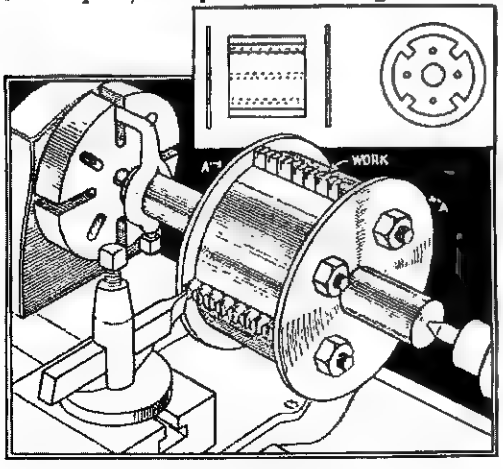

Jig Made Up to Slot the Ends of a Number of Steel Pins in a Lathe

Expanding Mandrel Holds Cylindrical Work in Lathe

Thin brass, aluminum or steel cylinders can be turned in a lathe by using this mandrel. The expansion part can be made from a piece of heavy tubing with a disk soldered in one end, or from a piece of round stock. It is slotted as shown almost its entire length. The slotted end is countersunk to take the tailstock center, while the other end is fitted with a specially made center, the shank of which is tapered to fit in the headstock. The expansion piece and the headstock center are held together by means of a setscrew. In use, the work is slipped over the expansion piece, the tailstock center of which spreads the expansion piece tightly against the work.

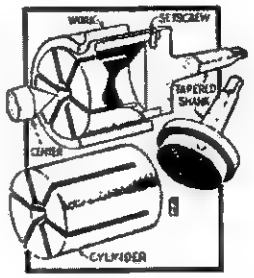

Threads Cut in Lathe Not Equipped with Lead Screw

Having an internal threading job and no lathe with a lead screw, I used the following device successfully: A nut, having the same pitch thread as that needed in the work, was obtained, and the outside was turned and tapered to fit in the lathe spindle. A bolt with the head removed was bent at right angles and attached to

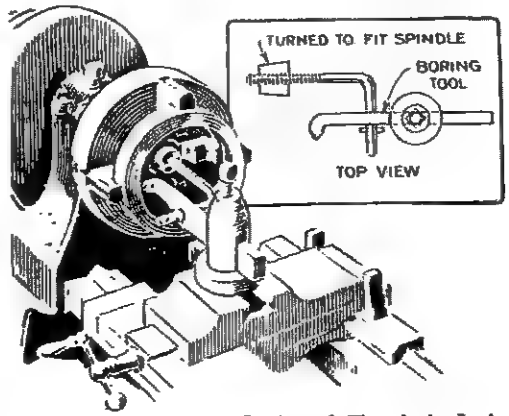

Simple Device Enables Cutting of Threads in Lathe Not Equipped with Lead Screw

Auxiliary Table on Drill Press Rotates Large Castings

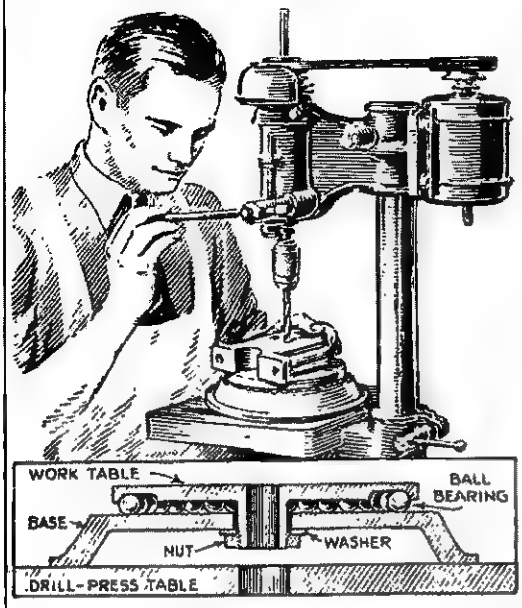

Ball-bearing table on drill press rotates work to drill hole accurately

Drilling large castings and similar work can be done much more accurately if the work can be rotated slowly as the drill is fed into it, the slow rotation of the work tending to compensate to some extent for an incorrect drill, or any inaccuracy of the drill-press spindle in relation to the table. In order to rotate the work easily, an auxiliary table to turn on ball bearings was rigged up as indicated. The base of the table was cast and the top was turned on a lathe, leaving a neck in the center which was drilled through and threaded to take a washer and nut. A groove was turned in the underside to serve as a ball race.

Jig Helps in Drilling Overlapping Holes in Stock

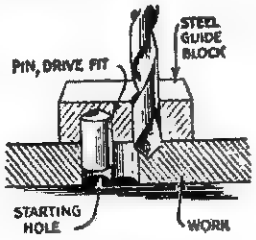

The next time you are making cut-outs in wood or metal and want to drill a number of small overlapping holes around the outline of the section to be removed, try this little jig. It consists of a small steel block, which is fitted with a short pin at one end and has a guide hole for the drill spaced the proper distance from the pin, made near the other end. In use, first drill two holes as close together as possible on the outline to be cut out, set the pin in one of these, and with the drill inserted through the guide hole, make the next hole in the work. If the pin and guide hole have been correctly spaced, the drill will just break through the side of the last hole drilled.

Tapping Fixture for Small Parts

Designed to hold small round or square parts that are to be tapped lengthwise, this fixture grips or releases them by merely moving a cam lever. The body is a piece of tool steel which has two holes drilled an inch or so from each end, after which it is slotted as indicated. The body is mounted on a steel base with a heavy cap screw run through a third hole drilled at the rear end. A hole at the split end takes a bolt which has a lever cam on one end and a lock nut on the other. In use, the fixture is clamped to the drill-press table and the work is placed in the open hole nearest the split end, after which the cam lever is moved to pull the two sides of the body tightly against it.

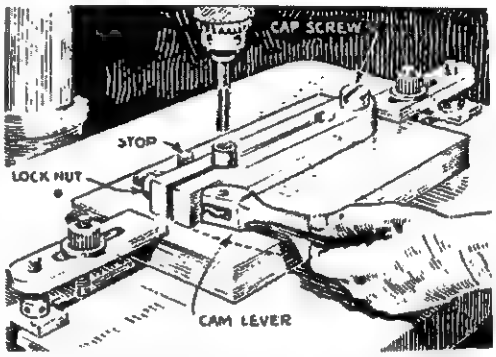

Small work to be tapped in drill press is removed from this fixture by merely flipping a cam lever

Slotting Sheet Metal with a Hacksaw

Slots can be easily cut in sheet metal with a hacksaw by bending the metal over a wooden form and clamping it in a vise. A cut is then made for each side of the slot, after which the metal is removed from the vise and the ends of the slot cut with a chisel. The edges are smoothed with a file. Slots of almost any size can be made in this manner.

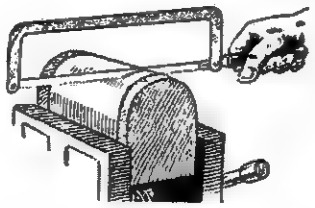

Guide Aids in Sawing Brass Tubing

Cutting a square end on brass tubing with a hacksaw is made easier by using this guide. It is a piece of sheet metal bent to fit tightly around the tubing, and has a slot in the center, which guides the saw blade. By keeping guides of different sizes on hand, you can handle any tubing work that may come to your shop.

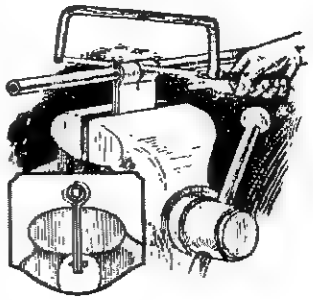

Simple Bench Punch for Light Metal

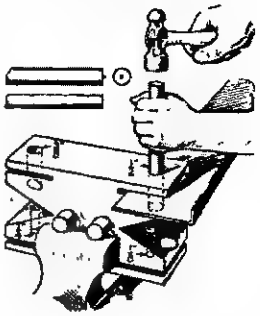

Here is a simple punch for light metal work that is easily made from a block of machine steel. V-notches are cut at the ends of the block and holes of different sizes are drilled through the top and bottom at each corner to meet the notches. Slots are then cut to take the work as shown. In use, the punch is clamped in a vise and supported by two large pins, which rest on top of the jaws.

Holder to File Washers

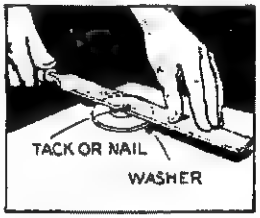

The next time you have to file the side of a washer to make it a trifle thinner, slip it over a tack or nail as indicated and you can hold it easily. The nail should be driven far enough into the wood so there is no chance of it coming in contect with the under side of the file.

The Commando Carbine - Part II

Author's Note:
The following is the balance of DeLisle material. These are photocopies of original data obtained from the British Patent Office. Patents are part of the Public Domain and as such are not protected by copyrights.
Publish this document in its entirety as it has never been disclosed before.

- John Minnery

COMPLETE SPECIFICATION

Improvements in or relating to Silencers for Firearms

I, WILLIAM GODFRAY DE LISLE, a British Subject, of 43, Belgrave Road, London, S.W.1, do hereby declare the nature of this invention and in what manner the same is to be performed, to be particularly described and ascertained in and by the following statement:—

This invention relates to silencing means for firearms of the type (hereinafter referred to as the type described) comprising a tubular casing that is carried or is to be carried by the firearm in spaced relation with the barrel thereof, and baffle-means comprising a plurality of baffle-plates mounted in spaced relation one with another, within the casing, which baffle-means has perforations providing a throughway for the projectile in line with the central longitudinal axis of the barrel.

It is an object of the present invention to provide improved silencing means of the type described of robust and compact construction which shall be more efficient in operation and more effective in silencing firearms than those proposed heretofore.

According to the invention there is provided silencing means of the type described, wherein the baffle-plates are each in the form of a disc of spiral or substantially spiral formation and are arranged to cause the gases emitted from the barrel to swirl about an axis that is offset from the path of the projectile through the baffle-plates, each of which baffle-plates has an eccentric perforation for the passage of the projectile, characterised in that baffle-plates situated towards the front end of the silencer have each a radial slit that extends from the periphery of the disc, preferably through the perforation, the two portions of which disc at opposite sides of the slit are bent so as to be spaced apart angularly one in relation to the other and lie at opposite sides of the general plane of the disc.

The improved silencing means preferably comprises means for preventing, or tending to prevent, the formation of a partial vacuum at the muzzle of the barrel.

When an expansion nozzle is situated, or arranged to be situated, at the muzzle of the barrel, the nozzle may be constructed and arranged to constitute the vacuum-prevention means referred to in the preceding paragraph.

The casing of the silencing means may extend, or may be constructed to extend, rearwardly around the barrel beyond the muzzle thereof to provide a rearwardly-closed expansion chamber situated between the muzzle and the breech of the barrel.

The peripheries of some or all of the baffle-plates may be spaced away from the internal periphery of the casing to provide an annular space or gap that surrounds the baffle-plates at the inner face of the casing.

The baffle-plates may be arranged in two groups, whereof a front group comprises baffle-plates constructed as set forth above, and the second group is arranged between the barrel-muzzle and the front group, and comprises a plurality of baffle-plates which are each of flat construction, one or more of which have each a shallow arcuate peripheral recess which, when in its position of use, lies in the lower part of the silencer.

When the barrel is provided with a plurality of vents in its front end portion, a sound-absorbing device may be provided in the form of a liner for that part of the casing of the silencer surrounding the vents, which liner will extend, when in use, from a situation in front of the barrel-muzzle to the rear of the silencer casing, and may comprise a tubular layer of sound-absorbing yieldable material protected on the inside or both on the inside and the outside by a thin metallic sheath.

One embodiment of the invention and a modification thereof are diagrammatically illustrated by way of example in the accompanying drawings, wherein:—

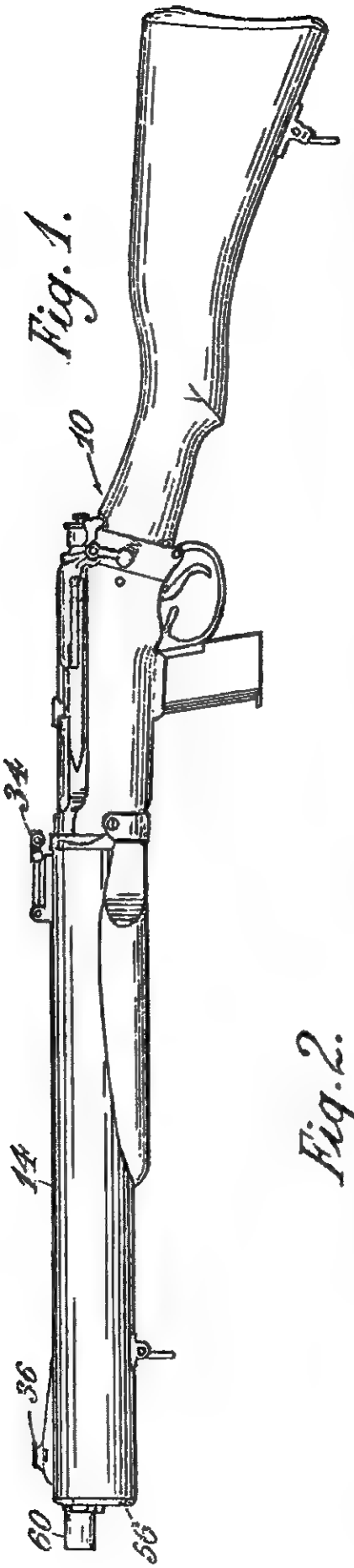
10
34
14
36
60
56

Fig. 1.

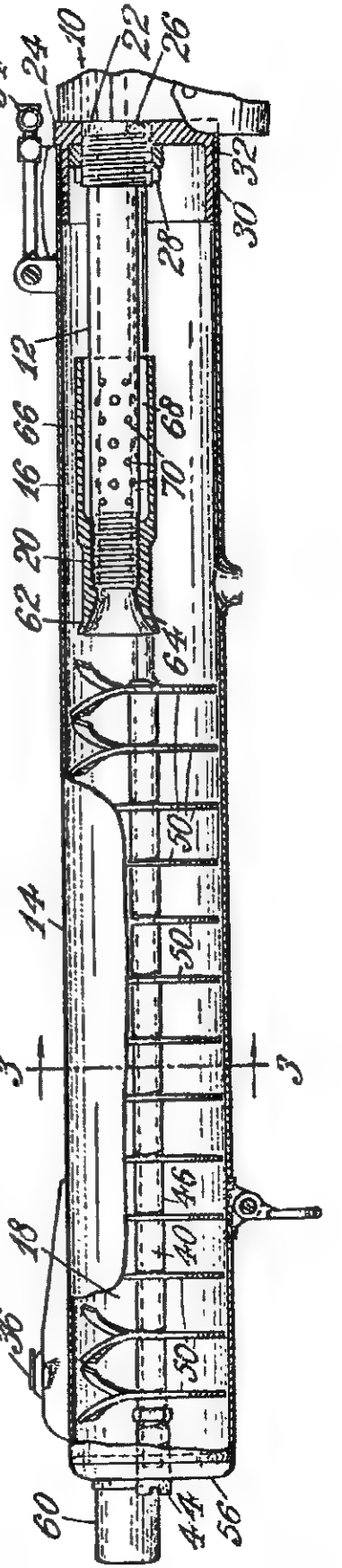
34
24
10
22
26
32
30
28
12
66
16
68
70
20
62
64
50
14
3
3
46
40
18
36
60
44
56

Fig. 2.

88 PMA

Fig. 3.

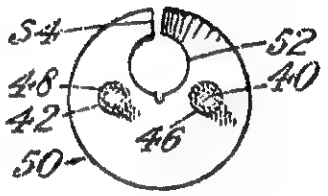

Fig. 4.

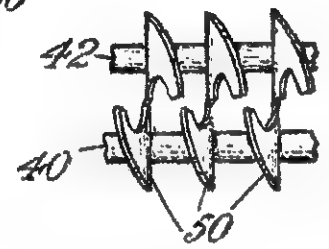

Fig. 5.

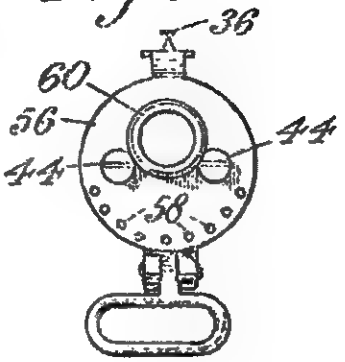

Fig. 6.

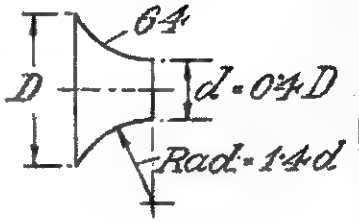

Fig. 8.

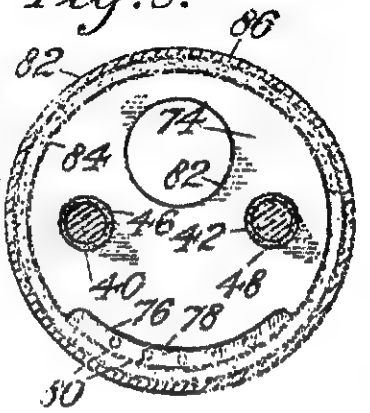

Fig. 7.

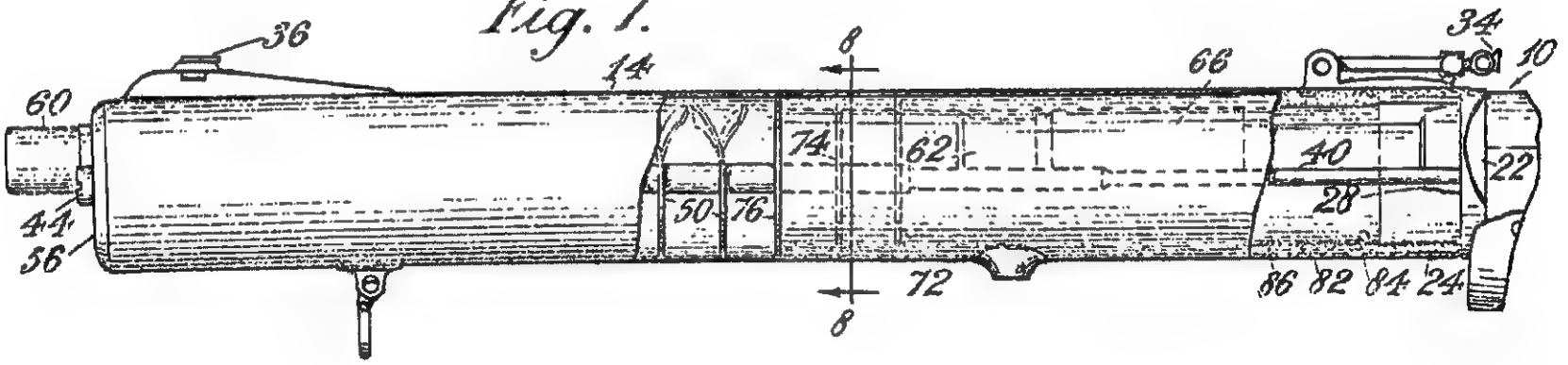

SHEET 2

Figure 1 is a side elevation showing a rifle provided with one construction of silencer according to the invention,

Figure 2 is a vertical longitudinal section showing the silencer on a scale larger than that of Figure 1,

Figure 3 is a detail sectional elevation taken on the line 3—3 in Figure 2, showing a baffle-plate,

Figure 4 is a detail plan view showing several baffle-plates and rods, broken away, on which they are mounted,

Figure 5 is an end elevation of the silencer as viewed from the left-hand end of Figure 2, and

Figure 6 is a diagram described hereinafter,

Figure 7 is a vertical longitudinal section showing another construction of silencer according to the invention, and

Figure 8 is a enlarged vertical section taken on the line 8—8 in Figure 7.

Like reference characters designate like parts throughout the several views.

Referring first to Figures 1—6, the invention will now be described by way of example with reference to silencing the discharge of a rifle 10 having a barrel 12 of .45 in. calibre, by means of silencing means comprising a tubular casing 14. This casing, which may be about 16 in. long, is mounted eccentrically on the rifle, so that a rear end portion constituting an expansion chamber 16 surrounds the barrel, and a front end portion constituting a baffle chamber 18 extends in front of the nozzle 20 of the barrel. This casing 14, which is circular in cross-section and may be about 2 inches diameter is mounted in spaced relation to the barrel 12 which is situated in the upper part of the expansion chamber 16.

A circular mount 22, 24 in the form of a socket for carrying the rear end of the casing 14 is fixed at the front end of the receiver 26 by means of a lock nut 28 screwed on the barrel. The circular wall 24 of this mount, on which the rear end of the casing 14 makes a sliding fit, has a short pin 30 which enters into the open-ended slot 32 in the casing at its rear end. The casing carries at its rear end a rear sight 34 and its front end a foresight 36, both of known construction.

The silencing means also comprises a plurality of baffle-plates threaded on a plurality of parallel rods that extend within the casing 14 in the direction of its length. As illustrated, two such rods 40, 42, which lie on a horizontal diameter of the casing 14, have their rear ends screwed into the end wall 22 of the mount 22, 24, and carry each a cap screw 44 at its front end. The rear end portions of these rods are of smaller diameter than the front portions on which two tubes 46, 48 are respectively carried. A plurality of substantially spiral baffle-plates 50 are threaded on these tubes 46, 48 and lie in spaced relation from the internal periphery of the casing 14. Each of these baffle-plates 50 has the form of a disc that has an eccentric perforation 52 in line with the barrel for the passage of the projectile, and has a radial slit 54 that extends from the periphery of the disc through the perforation 52 to the centre of the disc; the two portions of the disc at opposite sides of the slit are bent so as to be spaced apart angularly one in relation to the other and lie at opposite sides of the general plane of the disc. The baffle-plates are thus substantially spiral and, as shown most clearly in Figure 4, provide a substantially spiral passage, along which the gases escaping from the muzzle of the barrel will flow. The peripheries of the baffle-plates are spaced away from the internal periphery of the casing 14 to provide at each plate a space or gap that surrounds it at the inner face of the casing for permitting solid products of combustion to pass along the inner face of the casing.

The front end baffle-plate, of which baffle plates there may be about 13, is spaced away from an end flat plate 56, shown most clearly in Figure 5, situated at the front outer end of the casing. This plate 56 has in its lower portion an arcuate row of relatively small powder-discharge holes 58 adjacent to that part of its periphery which lies at the bottom of the casing. A short gas discharge tube 60 is carried by this plate 56 so as to lie in line with the perforation 52 and the barrel 12.

Means for preventing, or tending to prevent, the formation of a partial vacuum at the muzzle of the barrel is provided within the expansion chamber 16 in the casing 14. This vacuum-prevention means is constituted by an expansion nozzle 62 formed or provided on the muzzle 20, for which purpose the latter is screw-threaded externally, and the stem of the nozzle is screw-threaded internally. Preferably the internal face 64 of the nozzle has the shape shown in Figure 6, which shows a maximum diameter D, a minimum diameter $d=0.4D$, a radius of curvature of the side face of the nozzle being $1.4d$. In some cases the nozzle may be mounted on the rods 40, 42 but that arrangement is not preferred.

The silencing means described above is combined with a cylindrical shield 66, that is screwed on the barrel-muzzle 20 and lies in spaced relation with the barrel, to form a concentric annular space 68 placed in open relation with the interior of the

barrel by way of a plurality of vents 70 therein. These vents 70 are disposed evenly in a plurality of rows extending around and along the periphery of the barrel, with the vents in one longitudinal row preferably staggered in relation to those in an adjacent longitudinal row, in order that the pressure of the gases shall be reduced evenly around the periphery of the projectile. There may be 6 vents per row around the barrel, and these rows may be spaced about ¼ in. apart. The annular space 68 is closed at its front end at the nozzle 62 which may be distinct from the shield 66 and may serve as a lock nut for it, but the space 68 is open at its rear end.

In operation the column of air in the barrel and the gas leakage past the bullet first appears at the muzzle of the barrel. This is unavoidable and assists in building up in front of the muzzle of the barrel back pressure which assists the correct functioning of the expansion nozzle fitted to the end of the barrel.

As the bullet passes along the barrel, the said vents 70 constituting gas-discharge holes are uncovered in succession towards the muzzle, which vents serve to allow some of the gases propelling the bullet to escape into the expansion chamber, thereby still further building up the back pressure and also reducing the volume of gases flowing at high velocity behind the bullet. The short length of the barrel left intact at the muzzle end serves to steady the bullet should its balance have become upset or deranged through gases escaping behind it transversely to its path of flight. Also this short imperforate length of barrel permits the bullet to acts as a stopper in front of the gases during the period of their escaping through these vents.

When the bullet travels through the baffle-plates 50 after having passed the nozzle 62, the gases are made to swirl so that their travel is transverse to the path of flight of the bullet. It is arranged that the path of the bullet shall lie off-set from the axis of the swirl. The expansion chamber is carried right back as far as the receiver, primarily to provide increased expansion space for the gases, and secondly to produce a compact, robust and easily handled type of firearm, equipped with silencer.

When the gases strike the first baffle-plate after having left the nozzle 62, they are in a semi-dispersed state, that is, they have followed to some extent the lines of the nozzle, although there is probably still a column of concentrated gas directly behind the bullet. The effect of striking the first baffle-plate is that most of the gas is made to swirl in such a manner that the vortex of this swirl is central with the silencer tube, the longitudinal axis of the barrel and path of the bullet being offset from and eccentric to the centre of this tube. The effect of this swirl is to make the gas travel transversely of the path of the bullet, and in doing so a small proportion of it will tend te deflect and dissipate the column of high pressure gas directly behind the bullet. It is, of course, impossible for one baffle-plate to do all that is required in this direction, and therefore a number of similar plates are placed in spaced relation one behind another, each one contributing in some degree towards making the gas follow a path other than the flight of the bullet, the net result of which is that the bullet leaves te silencer with the gas following it at a greatly reduced velocity. The pressure of the gas in the silencer is higher than the pressure of the atmosphere outside, and it discharges itself from the tube 60 as a jet of gas travelling at a sufficiently low velocity as to produce very little or no sound.

In addition to this, in order that unburnt powder as well as burnt powder, refuse and solid products of combustion, shall not accumulate unduly in the silencer, particularly the live powder which on accumulation could cause serious accidents should it become ignited at any time, the baffle-plates do not fit the tube of the silencer tightly, but, as mentioned above, have a small gap around their periphery, while in the end plate of the silencer body small slots or holes 58 are pierced so that the above debris can be discharged or fall out as the case may be. The presence of these additional holes in the end plate provides additional exits for the gas, but this is purely incidental and does not affect the resulting sound in any way.

The expansion nozzle 62 is provided for the purpose of preventing a vacuum from being formed at the muzzle. The collapse of this vacuum produces a sharp " crack " which heretofore has not been suppressed except by means of sound-absorbing or damping material, such as felt. This " crack " is normally transmitted through the wall of the silencer of the type described, but by the provision of this nozzle, this vacuum is prevented from being formed, and therefore there is no " crack " to be silenced.

The vents 70 in the barrel surrounded by the shield 66 reduce the volume of gas following the bullet and prevent the gases which are travelling at high velocity from impinging directly on the wall of the silencer, which would cause a noise. The

ing flash, which is particularly advantageous in the case of firearms, such as a machine-gun, used at night.

Each construction of silencer described above is self-cleaning, and will also discharge foreign matter, such as sand, which has inadvertently been permitted to enter it.

Various modifications may be made in the details of construction described above without departing from the invention. For example, instead of using an expansion nozzle 62, a nozzle of internal frusto-conical shape may be employed. Also, in some cases more than two rods may be provided for carrying the baffle-plates. Moreover, instead of spacing all of the baffle-plates 50 away from the internal periphery of the casing 14, only some of them may have gaps at their peripheries. Further, if desired, the baffle-plates may be integral one with another and constitute a spiral structure. Again, in some cases the rods 40 and 42 may be dispensed with.

Having now particularly described and ascertained the nature of my said invention and in what manner the same is to be performed, I declare that what I claim is:—

1. Silencing means of the type described, wherein the baffle-plates are each in the form of a disc of spiral or substantially spiral formation and are arranged to cause the gases emitted from the barrel to swirl about an axis that is offset from the path of the projectile through the baffle-plates, each of which baffle-plates has an eccentric perforation for the passage of the projectile, characterised in that baffle-plates situated towards the front end of the silencer have each a radial slit that extends from the periphery of the disc, preferably through the perforation, the two portions of which disc at opposite sides of the slit are bent so as to be spaced apart angularly one in relation to the other and lie at opposite sides of the general plane of the disc.

2. Silencing means according to claim 1, comprising means for preventing, or tending to prevent, the formation of a partial vacuum at the muzzle of the barrel.

3. Silencing means according to claim 2, wherein an expansion nozzle is situated, or arranged to be situated, at the muzzle of the barrel, characterised in that the nozzle is so constructed and arranged as to constitute the vacuum-prevention means.

4. Silencing means according to claim 1 or claim 2, wherein the casing extends, or is constructed to extend, rearwardly around the barrel beyond the muzzle thereof for providing a rearwardly-closed expansion chamber situated between the muzzle and the receiver of the firearm.

5. Silencing means according to any of the preceding claims, wherein the peripheries of some or all of the baffle-plates are spaced away from the internal periphery of the casing to provide an annular space or gap that surrounds the baffle-plates at the inner face of the casing.

6. Silencing means of the type described comprising baffle-plates arranged in two groups, whereof a front group comprises baffle-plates constructed as set forth in claim 1, and the second group is arranged between the barrel-muzzle and the front group, and comprises a plurality of baffle-plates which are each of flat construction, one or more of which have each a shallow arcuate peripheral recess which, when in its position of use, lies in the lower part of the silencer.

7. Silencing means according to claim 6, wherein the end baffle-plate of the second group situated remote from the barrel-muzzle has in place of the arcuate peripheral recess an arcuate row of relatively small holes lying opposite to the arcuate recess in the next adjacent baffle-plate of the second group.

8. Silencing means according to any of the preceding claims, wherein an end flat baffle-plate situated at the front outer end of the casing is formed with an arcuate row of relatively small holes adjacent to that part of its periphery which lies at the bottom of the casing.

9. Silencing means according to any of the preceding claims, wherein the baffle-plates are supported by a plurality of parallel rods that are supported at the front and rear ends and extend in the direction of length of the casing.

10. Silencing means according to any of the preceding claims, in combination with a cylindrical shield that lies or is arranged to lie surrounding the barrel at the rear of its muzzle and in spaced relation therewith to form an annular space placed in open relation with the interior of the barrel by way of a plurality of vents therein.

11. Silencing means according to Claim 10, wherein the vents are disposed evenly in a plurality of annular rows around the periphery of the barrel, with the vents in one row preferably staggered in relation to those in an adjacent row, in order that the pressure of the gases shall be reduced evenly around the periphery of the projectile.

12. Silencing means according to Claim 10 or Claim 11, wherein the annular space is closed at its front end outside the barrel and is open at its rear end.

13. Silencing means according to any

of the preceding claims for use with a barrel provided with a plurality of vents in its front end portion, comprising a sound-absorbing device in the form of a liner for that part of the casing of the silencer surrounding the vents, which liner will extend, when in use, from a situation in front of the barrel-muzzle to the rear of the silencer casing, and comprises a tubular layer of sound-absorbing yieldable material protected on the inside by a thin metallic sheath.

14. Silencing means according to Claim 13, wherein the liner also comprises a thin metallic sheath on the outside of the sound-absorbing material.

15. Silencing means according to Claim 13 or Claim 14 wherein some of the baffle-plates of the second group thereof set forth in Claim 6, are surrounded by the front end portion of the liner.

16. Silencing means according to Claim 1 as shown in Figures 2, 3, 4, 5 and 6, or modified according to Figures 7 and 8 of the accompanying drawings.

Dated this 7th day of June, 1944.

BOULT, WADE & TENNANT,
111 & 112, Hatton Garden,
London, E.C.1,
Chartered Patent Agents.

CLASSIFIEDS

$1.00 per word, $10.00 minimum.

INGRAM SMG,semi-automatic pistol and carbine and sionic silencer parts for sale to any U.S.resident. Send a stamped & self-addressed envelope for a free illustrated price list to: SPECIAL PARTS LTD,Box 7652 Dept.PMA,Atlanta,Georgia 30357.

Military manuals list $1.00, FM 23-85 60-MM Mortar $5.00, Arm & Merchant, 1210 J Street, Modesto, CA 95354.

WANTED: High Standard 10-B Police Shotgun. New or used, W/WO Choate extension. Will send FFL with payment. Contact: The Void,Box 1272 Eureka, Cal 95501.

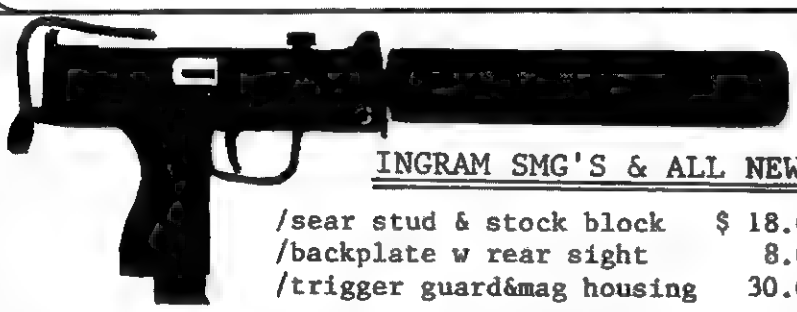

M10/M11 parts — Anyone can buy!

Special Parts Ltd.

INGRAM SMG'S & ALL NEW SEMI-AUTO PISTOLS & CARBINES

/sear stud & stock block	$ 18.00
/backplate w rear sight	8.00
/trigger guard&mag housing	30.00

1. Ingram M10 .45 gun parts pack. . . . **$150.00 prepaid** or **$160.00** COD
2. Ingram M10 9MM gun parts pack . . **$170.00 prepaid** or **$180.00** COD
3. Ingram M11 .380 gun parts pack. . . **$180.00 prepaid** or **$190.00** COD
5. M11 .380 Silencer Parts Pack . . **$115.00 prepaid** or **$125.00** COD
6. M10 9MM Silencer parts pack . . . **$115.00 prepaid** or **$125.00** COD
7. M10 .45 Silencer parts pack. . . . **$115.00 prepaid** or **$125.00** COD

10. Alternate Stock (flat butt) M10	25.00
11. Barrel Extensions (threaded)	36.00
14. Upper Receiver w/carbine barrel (M10)	168.00
17. Sear Pin (semi-automatic only)	10.00

NOTE: Prepaid orders by Cashier's check or postal Money order only!
On COD the customer pays for shipping and insurance.

EACH SMG PARTS PACK CONTAINS:
manual,used mag.,assembled bolt, stock & upper receiver assemblies,trigger guard,mag.housing, sear stud & stock block.

ALL SILENCER PACKS CONTAIN:
manual, new wipe assembly, spirals & baffles.
YOU GET EVERYTHING EXCEPT THE LOWER RECEIVER & THE 2 SILENCER TUBES.

Special Parts Ltd.
PO Box 7652 pma
Atlanta,GA. 30357

SEND A STAMPED, SELF-ADDRESSED ENVELOPE FOR FREE PRICE LIST.

42 **NOTE: ALL** Demilled Lower Receivers are SMG (Selective Fire) With Sear Pin Holes. **(SPECIFY CALIBER)** . . . . . **$ 30.00**

If you buy a silencer parts pack with a gun parts pack - You may deduct **$10.00** and/or if you buy a demilled SMG Lower Receiver with a gun parts pack (which normally costs $30.00) you may deduct **$10.00.**

The following article is reprinted from "The Practical Metalworker". This excellent shop manual was published in England during the early 1900's. This was an era when many of the small home workshops were set up with facilities for simple metal working.

THE PRACTICAL METALWORKER

The Fly Press

It is the object of this section to indicate the possibilities of the fly press. The great difficulty encountered with this machine is in the making of the tools, and a typical common example, a tin box, will be taken and dealt with progressively. It must not be thought, however, that the fly press is strictly limited to the pressing of articles to shape from sheet-metal; it may be used for branding, riveting, bending, flanging, etc.

The tools here shown are, of course, adaptable to work other than tin boxes.

Types of Boxes.—Tin boxes of the type here dealt with are made in a variety of forms, the three most common being shown in Fig. 1.

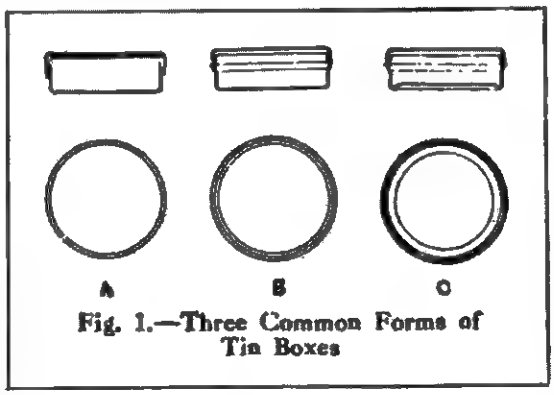

Fig. 1.—Three Common Forms of Tin Boxes

The box shown by A is of the simplest form, consisting of a plain straight-sided box and lid. The lid of this box, however, is sometimes jammed on so tightly that its removal is extremely difficult. To prevent this happening some boxes are made with a raised "bead" or ledge upon which the edge of the lid butts, as shown at B. In this case the edge of the lid is slightly flanged to fit the bead.

In some designs of boxes the removal of the lid is still further facilitated by making the side of the box above the bead slightly conical as at C. The side of the lid has to be made conical also, of course. It will be seen that the bottom of the box shown at C is slightly raised. The reason usually given for this is that the box is so made in order to make it appear to hold more than it actually does. However, boxes are nearly always made this way, so the tools used will be described.

The term "tin box" is somewhat misleading, as tin is not the material used, "tinplate" being used almost exclusively. Tinplate is merely sheet-iron thinly coated with tin each side.

Principle of "Pressing."—Tin boxes, and many things of a similar shape, are made from flat sheet material "pressed" into shape. That is, the sheet of material is confined between two hardened steel dies of such a shape that when they are forced together they press the material to the desired form.

Fly Press Described.—The machine to which these dies are fitted is known as a press. These are operated by either power or hand and are typified as power

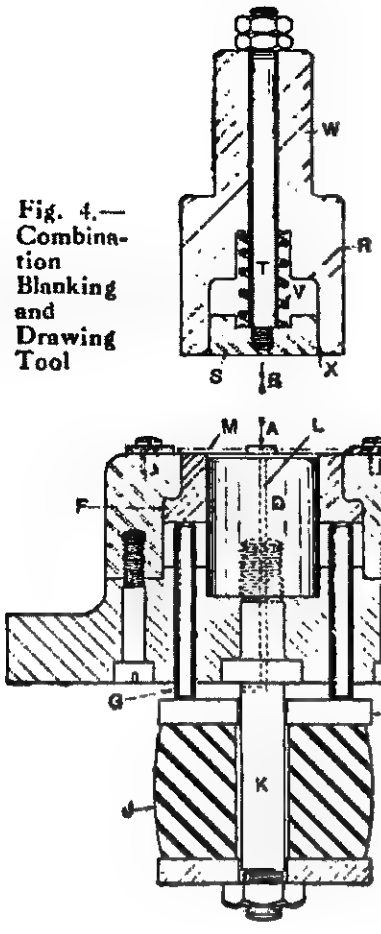

Fig. 4.—Combination Blanking and Drawing Tool

Fig. 3.—Shape of Shell Produced by Tool (Fig. 4)

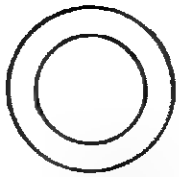

Fig. 4A.—Under Plan of Top Tool in direction of Arrow B

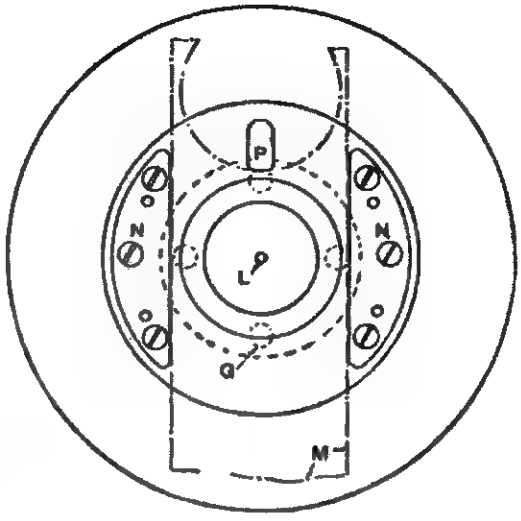

Fig. 4B.—Plan of Bottom Tool in direction of Arrow A

press that the pad S gives the bottom of the shell a sharp blow at the end of the stroke. This ensures the bottom of the shell being flat and also sharpens up the corners. The radius on the corner of the drawing punch should be as large as possible. Its size is, of course, limited by the size of the radius in the corner of the box. If a sharp-cornered box was required the corners would have to be squared up subsequently in a planishing tool.

This tool is simply a die to accommodate the shell and a sharp cornered punch. The bottom of the shell is given a sharp blow which squares up the corners. To facilitate the drawing of the blank the drawing die should be well radiused, as shown by X (Fig. 4), otherwise this corner will cling to the blank and tear it. The object of the air vent L is now most apparent. If this was not provided the air trapped between the shell and the face of the drawing punch D would be unable to escape and would prevent the flattening of the bottom. The downward stroke of the press has been described in three stages for clearness of explanation. Actually, of course, this is one continuous motion.

As the top tool ascends, the shell is stripped from the drawing punch by the pressure ring F. The pressure ring F is forced upwards by the rubber buffer J, the motion being transmitted by the four connecting pins G which slide in the bolster E. The shell is ejected from the top tool by the pad S by either the pressure of the spring V or by a positive knock-out acting on the end of the rod T. The positive knock-out is accomplished by having a stationary bar fitting in an elongated slot in the ram. When the ram is at the top of the stroke this bar engages the top of rod T, forcing it downwards, thus ejecting the shell.

After each stroke of the press the strip of material is fed between the guide plates until the edge of the hole, caused by the previous blanking operation, engages stop P (Fig. 4B), the strip being then in the correct position for the next stroke. If it is required to produce a box with the bottom slightly raised, as in Fig. 8, the same design of tool would be used, the only difference being in the form of the drawing punch D and the pressure pad S, as shown in Fig. 9. Here the face of the punch D is recessed to suit the raised bottom, the pressure pad S having a corresponding projection. The bottom of the shell is raised at the end of the stroke, as shown in Fig. 10. The pad S has bottomed on the face Y, as previously explained. The sharp blow that this pad then gives to the bottom of the shell forces it into the recess in the face of the punch D. In all other respects the operation of this tool is the same as the tool shown in Fig. 3.

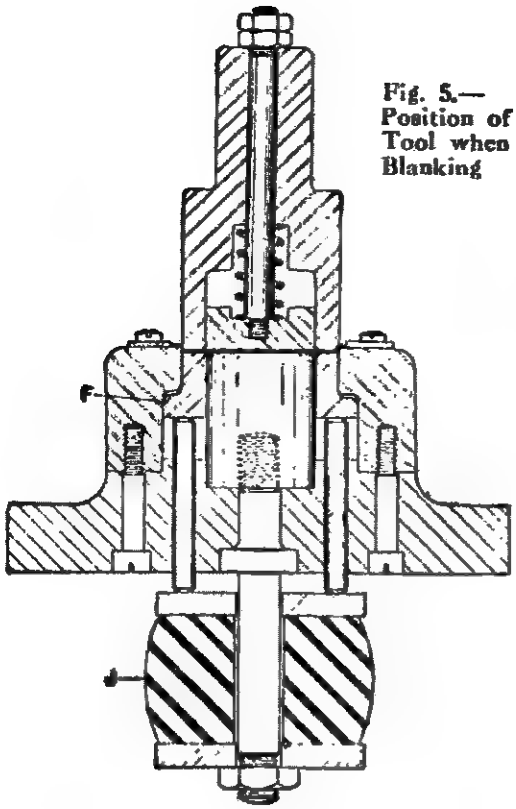

Fig. 5.—Position of Tool when Blanking

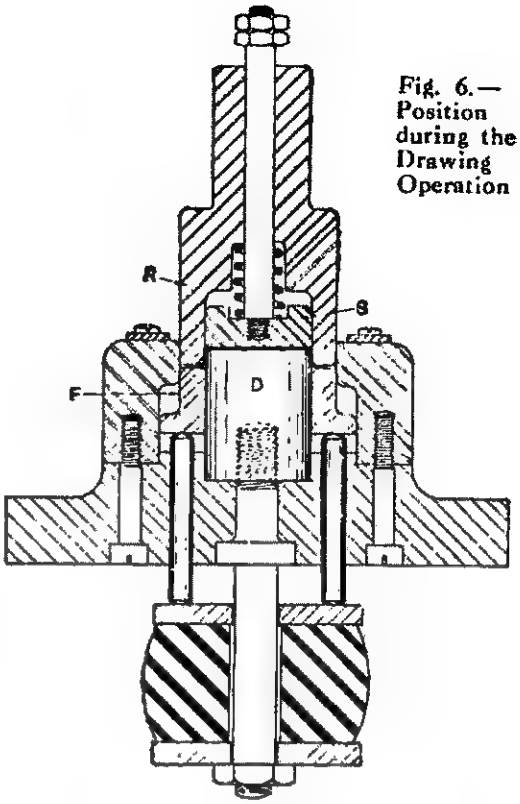

Fig. 6.—Position during the Drawing Operation

Fig. 8.—Box with Raised Bottom

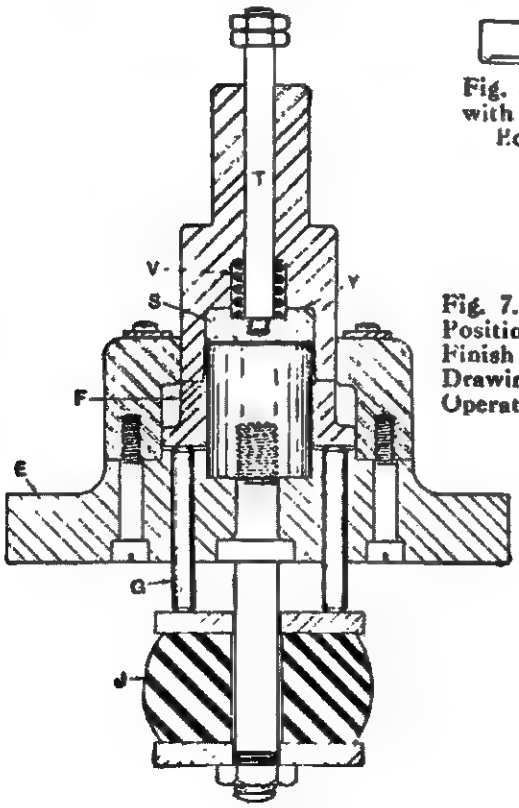

Fig. 7.—Position at Finish of Drawing Operation

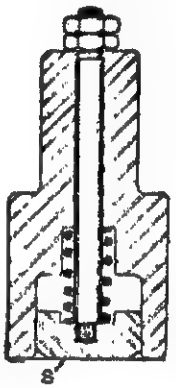

Fig. 9.—Combination Blanking, Drawing and Indenting Tool

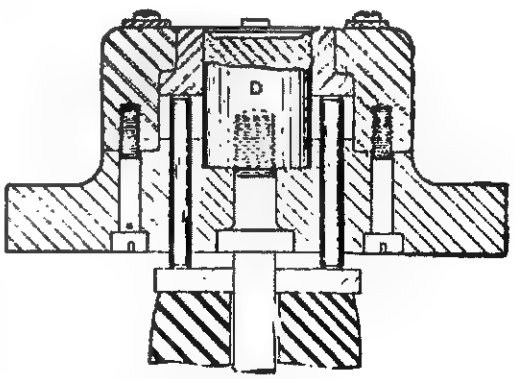

Beading Tool.—If the bottom of the box has to be beaded as shown in Fig. 11, this should be the next operation. The plain drawn shell is put in the tool by the operator, as shown by Fig. 12. This tool is shown for dealing with flat-bottomed shells. If a raised bottomed shell had to be beaded the only difference would be that the faces of the plunger D and pad S would have to be shaped to conform to the contour of the raised bottom. The bottom tool consists of a beading die C of hardened steel mounted in the malleable-iron bolster E. Sliding in this die is the plunger D. This plunger is supported by the four connecting pins G, which butt upon the plate and can be forced downwards against the tension of the rubber buffer J. The buffer arrangement is supported by the pillar K. The plunger D is made a push fit in the shell M, which is shown dotted in position.

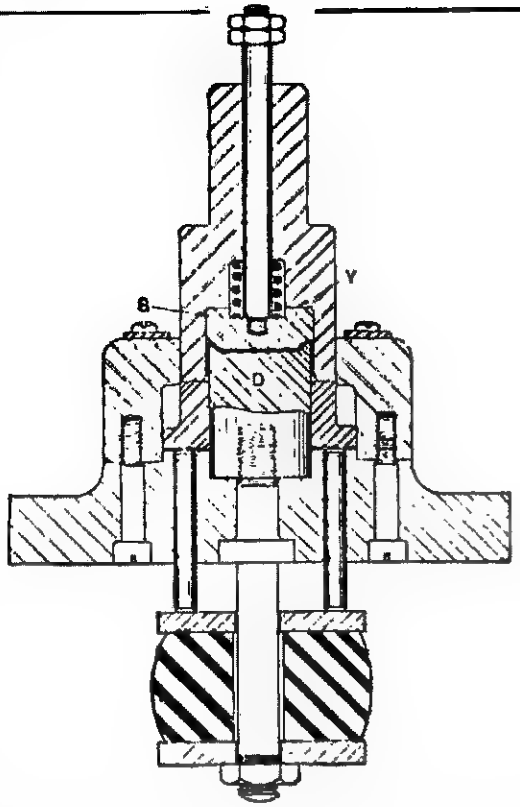

Fig. 16.—Position of Tool when Indenting or Raising the Bottom of the Box

The beading die is recessed to a diameter equal to that of the shell M and to a depth equal to a distance that the bead is required from the top of the shell as shown by F. The top of the recess P is radiused concave to suit one-half of the bead. The top tool is bored to a push fit on the shell, the mouth of the bore being radiused to suit one-half of the bead. The pressure pad S slides in the bore on rod T, and is acted upon by spring V. As the top tool descends the pressure pad S engages the bottom of the shell, pushing it home on the plunger D. The pressure pad S then recedes into the top tool until it bottoms on the face Y. Further travel of the top tool forces the plunger downwards against the pressure of the buffer until the edge of the shell is at the bottom of the recess F. The position at this stage is shown by Fig. 13. Here it will be seen the shell is almost entirely confined, the only possible direction in which the shell can "give" being outwards into the radii on the beading punch and die, as shown at Z (Fig. 13). The final downward travel of the top tool, therefore, forces this unsupported part round the side of the shell outwards and into the radii on the beading punch and die, as shown by Fig. 14, and so forms the bead. Actually, of course, the operation is continuous and not in stages. As the top tool ascends the beaded shell is ejected from the bottom die by the plunger D which is forced upwards by the buffer arrangement. The ejection from the punch is accomplished by the pressure pad S as explained.

The parts of this tool made of hardened steel are the die C, the punch R, the plunger D and the pressure pad S.

Cone Forming Tool.—A simple type of tool for forming the cone on the bottom of the box (*see* Fig. 15) is shown by Fig. 16. This operation is carried out after the beading operation previously described. The bottom tool consists of a hardened steel die ring B, mounted in the malleable iron bolster C. Beneath this die ring, and retained by it, is the hardened steel "bottoming" plate D. The top tool consists of a hardened steel body E, which is made with a shank F to fit the hole in the ram of the press. The body is recessed conically at the same angle as the cone it is required to put on the box; the largest diameter, that is, the diameter at the face, is equal to the diameter of the outside of the plain shell. The body is bored through to take the screw H, which is a sliding fit in the body. Upon this screw is attached the pressure pad G, which is acted upon by the spring J, the body of the top tool being recessed to take the spring.

The operation of this tool is as follows: The beaded shell is first placed in the die ring B as shown dotted in Fig. 16. As the top tool descends the pressure pad G engages the bottom of the box and ensures its being seated properly in the die ring. The coned recess K then engages the rim of the box, closing it in conically. The position of the top tool at the end of its travel is shown in Fig. 17. Upon the upward travel of the top tool the shell is ejected by the pressure pad G. It therefore remains in the die ring B, being removed from this by the operator of the press. The tool shown in Figs. 16 and 17 is for coning a flat-bottom box (*see* Fig. 15). If it was required to cone a raised-bottom box as shown in Fig. 18 the tool would be slightly different. The difference would be that the pressure pad G and the "bottoming" plate D would have to be made to conform to the contour of the raised bottom.

The lid for the box (Fig. 3) would be a similar shaped shell, slightly larger in diameter and somewhat shallower. The tool for producing it would, therefore, be of the same design as that shown in Fig. 4, the difference, of course, being in the dimensions. When, however, the box is beaded and coned, the lid would have to be made as shown at Fig. 19. Here the sides are coned to the same angle as the box and the rim is flanged to suit the bead.

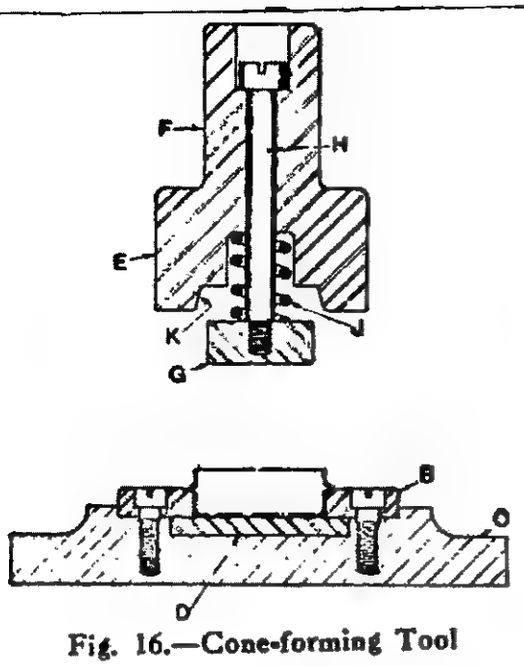

Fig. 16.—Cone-forming Tool

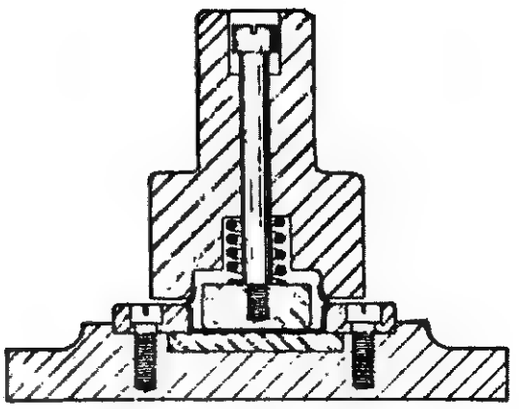

Fig. 17.—Position of Tool when Forming Cone

Fig. 15.—Coned Bottom of Box

Fig. 19.—Lid for Box

Fig. 18.—Box with Raised Bottom

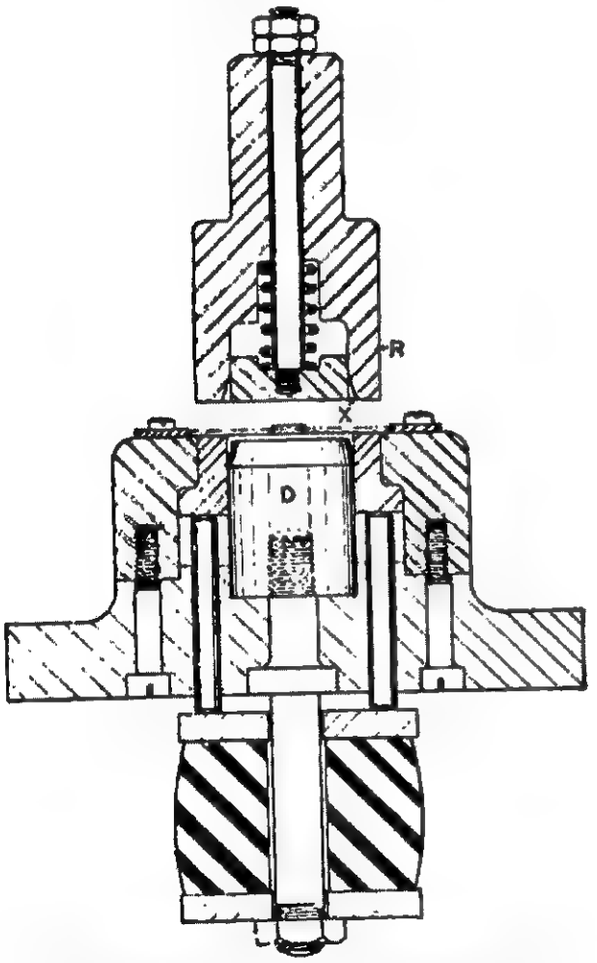

Fig. 20.—Combination Blanking, Drawing and Flange-forming Tool for Box Lids

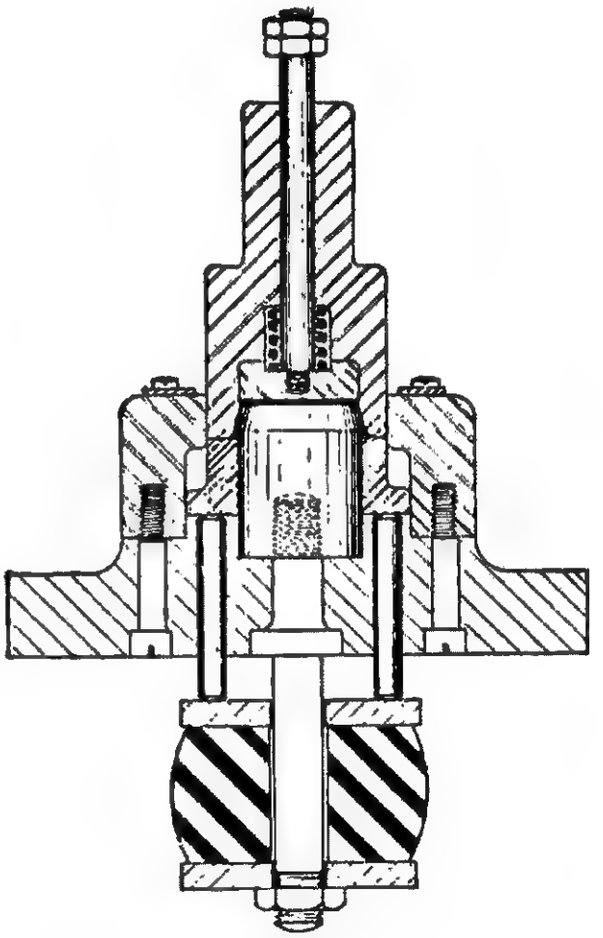

Fig. 21.—Position of Tool at End of Stroke

rim is not drawn straight by the die it follows or conforms to the radius of the mouth of the die. Thus the lid is left with a slightly curled or flanged rim.

USING THE VICE AS A PRESS

In certain work, chiefly where only one or two of a given article are needed, the vice may be quite effectively used for pressing sheet-metal.

Fig. 22 is a view of a vice arranged for the production of a metal plate, as at A, from strip material of the required width. The large punch B forms the end of two pieces simultaneously. The minimum width at the narrowest section of this punch should not be less than the thickness of the metal to be punched. Two round punches, one is seen at C, and plates D for guiding the strip as it is fed forward, are required. For economy, however, two or three pins driven in would act as a guide equally as well. E is an adjustable stop should plates of different lengths be wanted.

Rather important are the two guide pillars F which are fixed into the punch

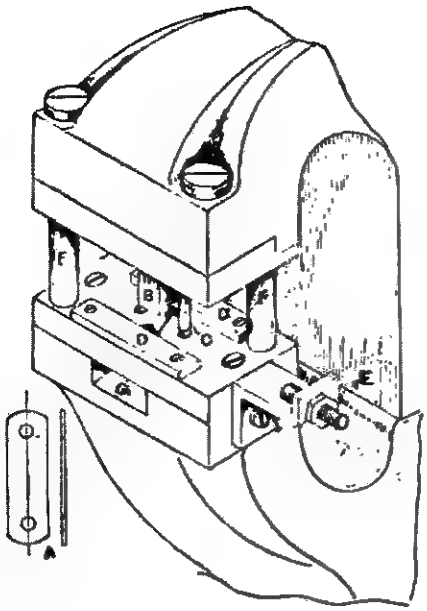

Fig. 22.

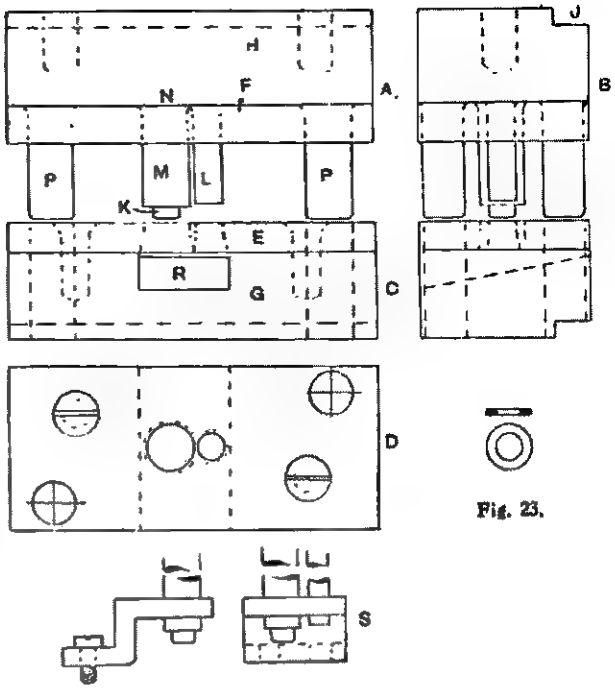

Fig. 23.

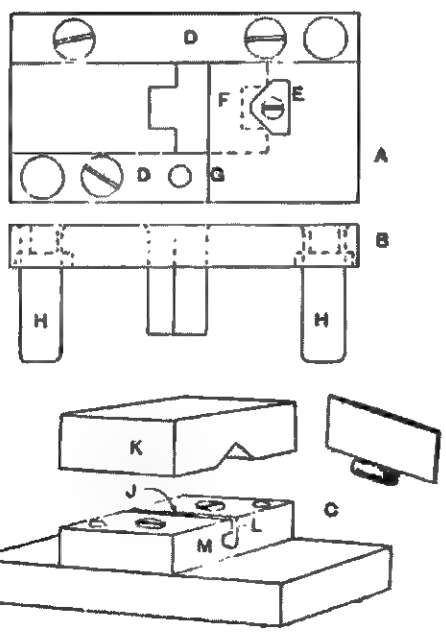

Fig. 24.

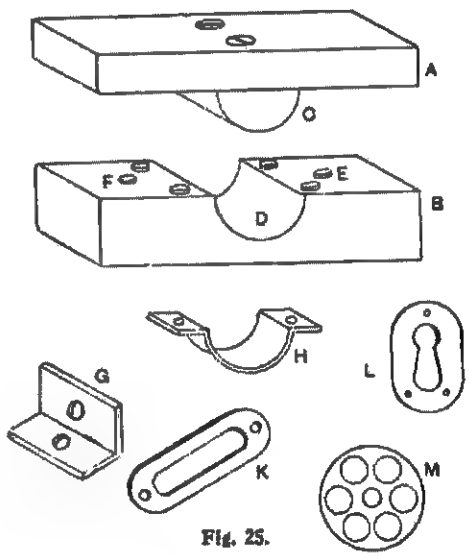

Fig. 25.

Fig. 22.—Vice Arranged for Press Work

Fig. 23.—Tool for Producing Washers

Fig. 24.—Tool for Making Hinges

Fig. 25.—Concave Bending Tool and Articles for Manufacture

plate, and are a sliding fit in the die plate. These pillars enter their holes before the punches reach the metal, and secure alignment by taking up the slackness which is present in all vices. At G is a kind of shoot, from which the pieces of scrap metal issue, and to facilitate this the vice should be erected on a massive beam of timber with an inclination one way or the other—in other words, attempt to make an inclinable power press.

Fig. 23 shows the vice tools for making washers, A being the side elevation of the punches, B the end elevation, C the side view of the die, and D the plan.

The die plate E is first made from a piece of tool steel, although for washers in vulcanised fibre and like substances ordinary mild steel is suitable. The plate is marked off, and the two holes for the large and smaller punches drilled and reamed. The plate F for holding the

punches is next prepared, a piece of mild steel being used, and this is clamped face to face with the plate E and the holes transferred through.

The blocks G and H—pieces of cast-iron will suit—are next made, and the slot at J removed to suit the lip on the actual vice jaws. To these blocks the plates E and F are secured by means of screws and dowels. These screws and dowels are not shown in the punch plate to avoid confusion.

Leaving these plates for a moment, get some silver-steel or cast-steel and turn the punches, leaving the pilot K equal in diameter to that of the punch L. Notice also that the punch M is slightly longer than L, which enables it to enter the metal and form a "steady" for the weaker punch. The punches are hardened and tempered, leaving the end N soft, allowing it, after being driven into plate F, to be riveted over into a chamfer provided.

The punches are next passed through the holes in the die plate until the faces of the two plates meet, and then having marked off the position of the holes for the guide rods P they are drilled, the drill passing through the two plates with their respective cast-iron blocks.

It is best to ream these holes to some suitable standard size, say, $\frac{5}{8}$ in. The guide rods are then turned to a sliding fit in the die side, the ends being slightly rounded to facilitate entry when working, and the other ends are passed through the punch plate F and, like the punches, riveted over. These guide rods may be made of mild steel, and if the materials are at hand case-hardened.

The holes for the punches should be reamed at the back, a slight taper two or three degrees being enough. To allow for the washers getting clear after punching, the taper should extend to within, say, one-eighth of the die face. The slot at R is provided to allow both washer and scrap to pass from the die to any receptacle provided.

As the amateur will no doubt make washers from any available scrap, a stripper (to strip the metal from the punches after descending into the die) is not shown here, but a simple one as at S can easily be fitted.

Fig. 24 is a punch and die for producing hinges without any scrap metal being left. A is a plan of the die, B a side view of the punch, and C is the tool for curling the hinge.

Referring to A, the metal, which is in strip form and the same width as the hinges required, is passed between the guides D. The dotted lines butting on the stop E show how the punch blanks one-half of the hinge through the die, and leaves the other half on the die at F. And it will be noted that the guide strip D is cut away here at G to allow the operator to remove this half as it is produced.

This tool is, like Fig. 23, provided with guide pillars H, and both punch and die plate are fixed to suitable blocks, and finally to the vice jaws.

The working of the curling die is obvious. The blanks from tools A and B are, after being annealed, stood in the slot J, and the upper tool K descends, being located, so that the V rests on the protruding edge of the hinge, and the pressure being continued, the edge of the hinge at the bottom of the slot is forced to conform to circular cavity at M.

The making of this tool is not difficult if care is taken. The most important thing is to get a nice smooth hole at M, which is best reamed and lapped afterwards with some fine emery powder, and then to get the slot J nicely located, so that the edge L is continuous.

The bottom half of this tool must be made of tool steel, hardened and smoothly finished.

The upper and lower tools can be fixed to the vice as before, no guide rods being necessary if the vice used is in fair condition.

Fig. 25 is a cheaper affair for bending simple articles, such as pipes, clips, etc., and can be made of odd material. The pad C is first turned and then cut in half. The corresponding die B is the same diameter plus two thicknesses of the material from which the clips are to be made. The studs E and F are for locating the position of the plates to be bent, and can be made removable to allow of various-size plates being bent. The illustration gives an idea of the construction, and like the previous tools are fixed to the vice jaws.

The making of these tools will prove both interesting and instructive, and to many may be an introduction to better and more elaborate press-tool work. The results in any case will repay the labour, and the writer knows a firm who during the war being unable to secure washers or presses, resorted to the tool as shown by Fig. 23.

A few possibilities are shown in Fig. 25, G being a small angle bracket, H a pipe clip, L an escutcheon plate, K a name plate. and M a wheel for toy trains, etc.

PRODUCT REVIEW by Clyde Barrow

THE NIGHT VISION DEVICE

Magnifies Low Level Light 50,000 Times.

"The Night Vision Device" by E.A. Gale.c 1978. Available from: Fantastic Research,Box 213,Middletown, Ohio 45042. Price $15.41 pgs, 8½ x 11.

This publication w/22 drawings and over 6,000 words is a complete set of plans for building a passive viewing device capable of magnifying low level light 50,000 times. For more info on these devices see "Night Viewing Devices", PMA Vol.2 Issue #2.

Building time is estimated at 40 hours with simple hand tools. Material costs will vary from $500 with surplus material to about $1100 for all new components. Retail devices of a similar quality are priced at $2500 to $7500, so the high cost of construction is relative.

These plans will also serve as a trouble shooting guide and repair manual for future reference.The material may also be of some value for home repair of commercial night scopes.

All procedures are clearly explained and illustrated with first rate drawings.Anyone with an interest in night scopes should have a copy.

The BOUND EDITION of PMA·Volume One

NOW IN OUR 2nd PRINTING!!

The Only Magazine Of Improvised Weaponry

COMPLETE INDEX FOR EASY REFERENCE

Contains Everything From The First Year's Issues And More

INCLUDES THESE FEATURE LENGTH SECTIONS

Illustrated Dictionary of 19th Century Weapons A-Z *

Homemade Guided Missile Solid Fuel Radio Controlled 2lb. Shaped Charge

Reprint of Army TM31-210 IMPROVISED MUNITIONS HANDBOOK

STEN Submachine Gun Parts ID Drawings

PATENT DRAWINGS For The INGRAM SMG!

EXAMPLES OF THE MANY HOW-TO ARTICLES

- Flashbulb, Friction and Electric Detonators
- Armor Piercing and Exploding Pistol Ammo
- Troika Three Shot Assasination Pistol
- Flaregun / 22 Pistol Conversion
- Smoke and Gas and CO_2 Grenades
- Caltrops and Roadblock Devices
- Plastic Mortar and Pipe Bombs
- Bazooka Rockets and Launcher
- AR7-Silencer / Folding Stock
- Claymore Anti-Personel Mine
- Arming GI Practice Grenades
- 12 Gauge Waterpipe Shotgun
- Silenced Ruger .22 Pistol
- Black Powder Production
- Chlorine Gas Generator
- Flashpowder Production
- Dart Catapult Pistol

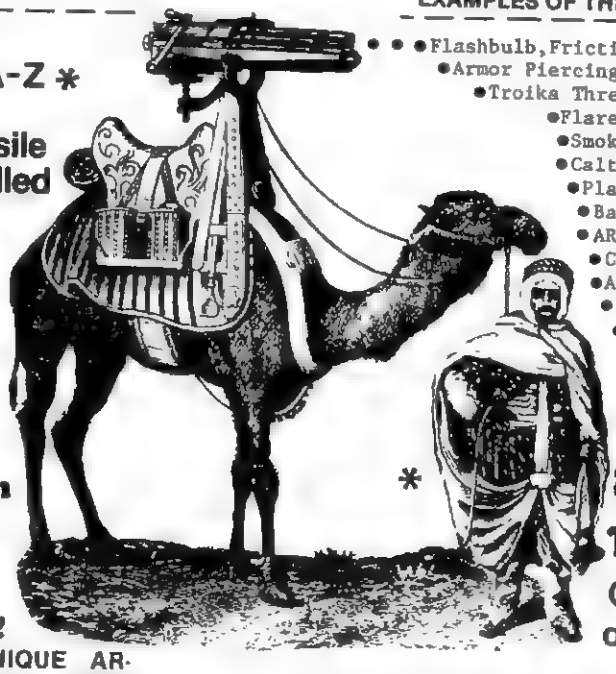

* 236 PP - 11x14

1½ LBS of INFO

OVER 700 photos, drawings/diagrams

...many more WEAPONS, UNIQUE ARTICLES & LETTERS from our readers, PRODUCT REVIEWS, hints & sources for PARTS, MATERIALS & BOOKS of interest to ANYONE with a HOME WORKSHOP even if you AREN'T a weapons BUILDER!

Check or Money Order To: THE POOR MAN'S ARMORER

$14.95 ppd.

P.O. BOX 586, EUREKA, CA 95501

CAL. ADD 6% SALES TAX

DEALER INQUIRIES INVITED

Improvised LANDMINE

by Raymond Larner

INTRODUCTION

This mine will make an excellent addition for perimeter defense as long as you understand its limitations. First, it has to be in place before you get attacked. If it isn't, it can be awfully hard to conceal well enough so that the attackers won't spot it. Second, since it has to be emplaced before you are attacked it is a hazard to you and any animals in the area.

Although this mine will injure anyone who sets it off, and quite possibly anyone else in the vicinity, it is the psychological threat that is most effective. No one in his right mind would willingly walk into a mine field. Just post a few "Danger/Minefield" signs around the area.

I strongly suggest that anyone who decides to use this design obtain a copy of the Army training manual on Mines and Mine Warfare. The manual not only explains how to lay out a mine field, but also gives you a good idea of what type of terrain will be most effective to put your mine field in.

I have not given any dimensions since you can make the landmine as large or small as you feel necessary.

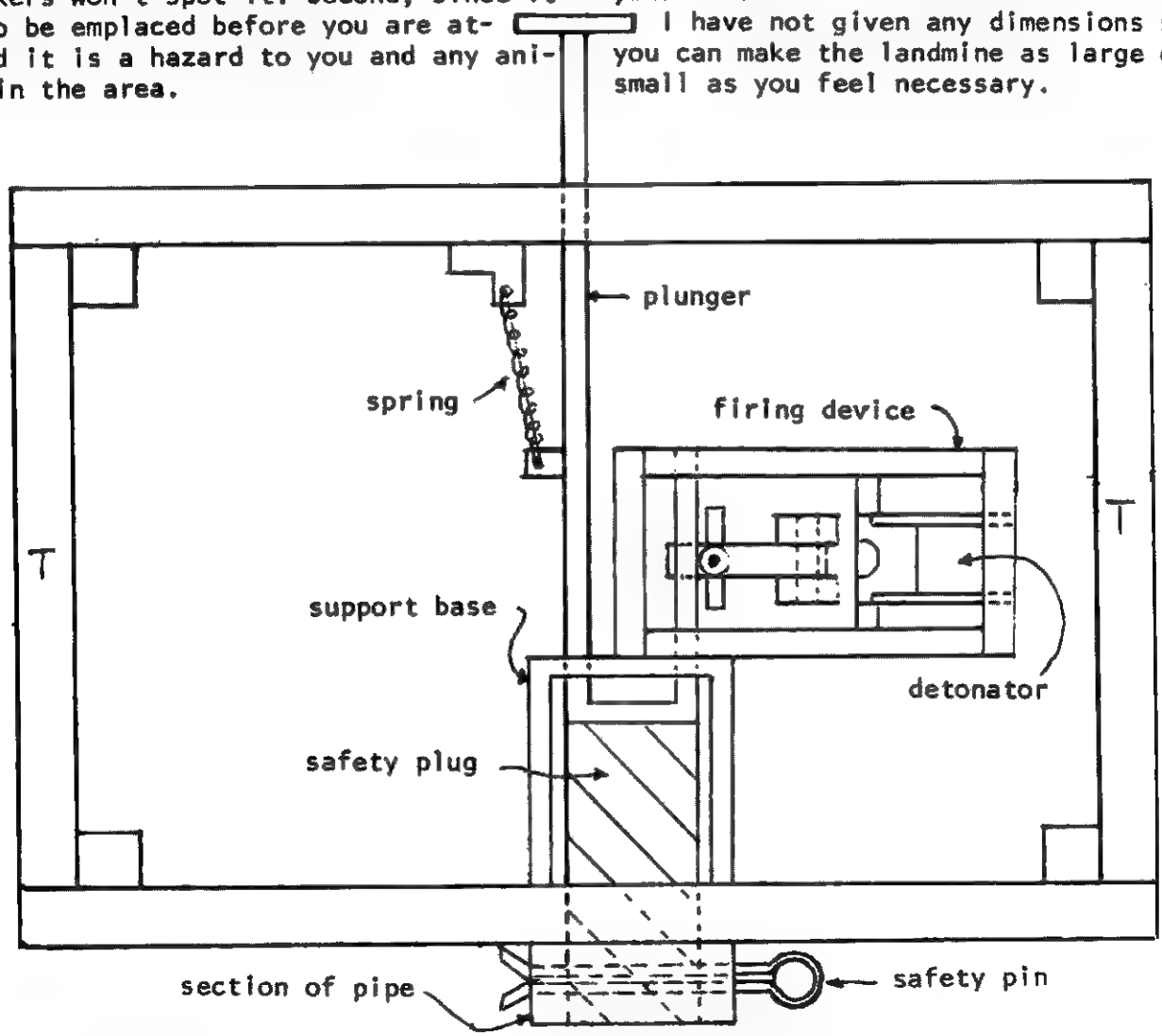

With the exception of springs, firing pin, safety pin and .410 shotgun shell base, the entire mine is made of plexiglass. This will make it almost impossible for an attacker to use a mine detector or metal detector to locate your mines. The only way he can find your mines is to manually probe, which should give you plenty of time to use a rifle.

ASSEMBLY

The outer case of the mine is glued together leaving the ends marked "T" open. Drill a hole through the center of the top of the case twice as large as the diameter of your plunger. Now glue the top, plunger spring, support block in place as shown.

Turn the case over and drill the hole for the safety plug. Glue the section of pipe to the bottom of the case so that it circles the hole for the plug.

To make the detonator, cut a .410 shell so that all you have is the brass base. Glue the shell base into a short section of plastic pipe. Pour enough powder back into the shell base/pipe to fill the shell base. Now pour a mixture of potassium chlorate and granulated sugar into the pipe until it is nearly full. (SEE NOTES) Use a piece of cardboard as a wad to keep the mixture in the pipe.

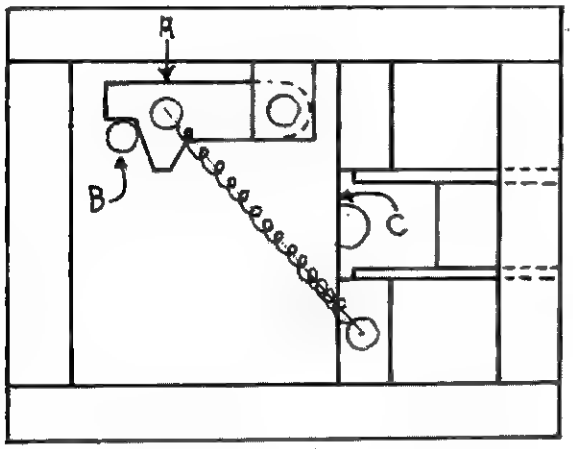

Firing Device (detail) A-firing pin B-plunger pin C-410 shell base

Assemble the firing device as shown, leaving out the springs, and check the detonator for fit. It does not have to be a tight fit as the detonator will be glued in place later. Make sure the firing pin swings freely. Now assemble the support base and glue it to the firing device.

Insert the plunger through the bottom of the support base and up through the firing device. It should work up and down smoothly. With the plunger in place, glue the lower plunger spring block to the plunger. Make sure to place it high enough so that when the plunger is depressed to release the firing pin, the block doesn't strike the top of the support base.

Attach the firing pin springs. Pull the firing pin back and slide the plunger up into position to hold it in the cocked position. Now glue the front of the firing device on.

Insert the completed assembly into the case and glue the support base in place over the safety plug hole. Use a non-hardening caulking compound to seal the hole where the plunger passes through the case of the mine.

When the glue has dried, attach the plunger spring. The stronger the plunger spring, the more weight it will require to depress the plunger and set off the mine. The plastic disk on top of the plunger is optional. It provides a slightly larger area to be stepped on,but might also make the mine easier to spot.

The safety plug is a piece of plastic round stock. The plug should be long enough so that when it is held in place with the safety pin it holds the plunger tight against the inside of the support base.

Insert the safety pin through the pipe section and safety plug and open the ends of the pin to hold it in place. Attach a length of 1/8" nylon line to the safety pin to make it easier to pull the pin.

Insert the detonator and glue it in place. Glue one end into the case. Set the case down with the open end up. Fill the case with black powder, gun powder or a mixture of potassium chlorate and granulated sugar (see Notes). Now glue the other end on the case.

Store your completed mines in a cool, dark place.

When you are ready to plant your mines remove the safety pin and plug and bury them so that only the plunger extends above ground.

NOTES:

The firing device case should be made of clear plexiglass to make it easier for you to see that the detonator is correctly placed when you glue it in place.

The firing device and support base are completely enclosed boxes (except for the holes for the plunger) so that the main explosive does not get into them and jam them.

The plunger spring should be chromed or stainless steel to prevent it from rusting while in contact with the main explosive.

The Potassium chlorate/Granulated sugar mixture is made up of three (3) parts (by weight) potassium chlorate and one (1) part granulated sugar.

Editor's Note:

Obtain a copy of "Working with Plexiglass" from your dealer or refer to Mr. Larner's "Claymore Article" in the PMA Volume One, page 118.

.223cal/.556mm Rifle Silencer

★ For M16/AR15, AR180 & Mini 14 Rifles ★

by Clyde Barrow

The following material will enable you to construct a noise and flash suppressor (silencer) based on the Sionic 5.56 mm/ M-16 unit designed and produced by MAC in 1972.

Most procedures needed can be done with a small metal cutting lathe and a standard drill press. If your lathe lacks a thread cutting setup, farm out those steps to a machine shop or use substitute methods of assembly.

For more info on MAC/SIONICS, as well as an in depth explanation of alternate methods for producing silencer spirals, tubes etc. w/o machine tools, see M-10/ M-11 Silencer PMA Vol.2 #1.

SECTION ONE - Ruger Mini 14 Modification to Mount 5.56mm Suppressor

A. Sight Removal

Drift out front sight roll pin, and drive the sight off the barrel. Now is a good time to improve the substandard sight as shown in fig.1, or you may wish to replace it completely by cutting a dovetail in the sight collar and installing a modified M1/M14 front sight.

B. Sight Relocation

Reinstall the front sight in its new position on the barrel. The front edge of the sight collar should be 4.75" from the muzzle. (see fig.2) The barrel O.D. is greater at this point, so enlarge the collar's I.D. until it can be gently driven into position. Check blade for correct vertical alignment, and rotate it to the proper position if necessary. Drill through the hole in collar to notch barrel for pin clearance and reinstall roll pin.

C. Muzzle Threading

Two distinct procedures may be used. The preferred method is to use a large thread cutting lathe, or a lathe and ½"x28 EF (Extra Fine) Die to turn down and thread muzzle to specs given in fig.3. This will duplicate the Colt M-16/AR-15 and Armalite AR 18/AR 180 muzzle dimensions. The ½x28 pattern will allow installation of the Sionics Suppressors and other accessories available for the above guns. Maximum allowable misalignment of threads to bore axis 1° so it may prove a wise move to farm out the job to a competent machinist/gunsmith. No need to mention the suppressor, you only want to mount an M-16 flash hider.

The second procedure may be used if you don't have access to a large lathe to turn the barrel down to ½" OD. The barrel remains the original diameter and is threaded with one of the two dies listed below. The only other tools needed are a large die stock (holder), a padded vise, and a small file.

Preferred Die-9/16x24 EF. Not generally available locally but may be ordered through a machine shop. Order the companion 9/16x24 Tap at the same time. The tap will be needed to thread the muzzle coupling later on.

Second Choice- 9/16x18 NF. These dies and companion taps are available locally in any well stocked hardware or auto parts store.

The factory barrel is the correct OD for 9/16 threads, with a chamfered edge to assure the die is started straight when threading. Using one of the two dies listed above, undercut and then thread as outlined in fig.4. Take your time, use plenty of cutting oil, and back off on the die frequently to remove excess chips. Concentrate on holding the die stock at a true 90° to the axis of the bore while you turn it.

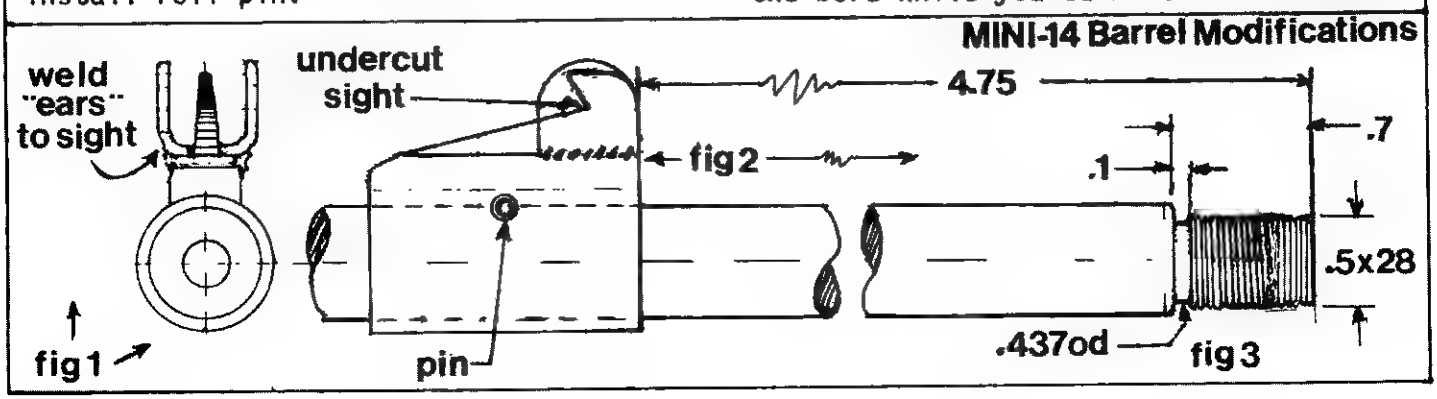

D. Suppressor Modification For Mini 14

The suppressor's muzzle retaining ring (part #6) must be modified for use with either of the two 9/16" threaded muzzles. Refer to Fig.5 for specs.Once modified, the ring is installed in the same manner as a regular #6 ring. Except for hand fitting a bushing to the barrel's OD, the suppressor/Mini 14 are now compatible.

Note: The preceding section on the Mini 14 can be used as a guide when modifying other .22 caliber rifles and pistols for suppressor mounting. For those weapons supplied with ½" OD barrels,a fourth thread size, ½"x20 NF may also be used. This is a commonly used pattern and is found on DAQ muzzle couplers, Parker Hale .22 cal.silencers and several other popular designs.

FIG5

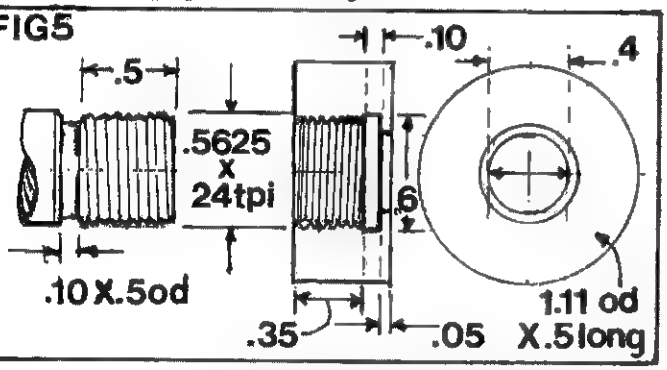

NOTE: SECTIONS TWO,THREE,FOUR & FIVE are modified reprints from the instruction manual for the SIONICS Suppressor.

SECTION TWO - Purpose of Noise and Flash Suppressor Assembly.

The sniper in the field must take all possible care to avoid the compromising of his position to the enemy. Obviously, an advantage in his favor would be the suppression of flash and muzzle noise to eliminate the enemy from picking up the source of fire. The 5.56 mm suppressor is a device designed to deceive persons forward of the firer as to the exact location of the weapon and its operator. It accomplishes this by disguising the signature of origin in two ways.First,it reduces muzzle noise to such an extent that it becomes inaudible a short distance from the weapon-making exact sound location extremely difficult,if not impossible;secondly,it suppresses muzzle flash at night making visual location also equally difficult.

SECTION THREE - Characteristics of the Model 5.56 mm/cal..223 Suppressor.

a. The 5.56 mm suppressor has no effect on muzzle velocity and improves the accuracy of the sniper rifle.
b. The 5.56 mm suppressor is a light weight device which may be quickly attached,without tools,to the barrel of a standard unmodified M-16 or AR 18 rifle. (See modification info for use on Mini 14 and other similar rifles) No assembly alignment is required.
c. The suppressor is designed for use in a semi-automatic mode ONLY to deliver accurate aimed fire, without disclosing point of origin.
d. The suppressor produces minimum chamber carbonization.
e. The bipod assembly may be used with the rifle in the normal manner when the 5.56 mm suppressor has been installed.
f. Maintenance functions can easily be performed in the field employing standard cleaning equipment issued with rifle and one .38 caliber brass brush.
g. No spare or replacement parts are required, other than the bushings,and present tests indicate that the suppressor properly maintained, will have a service life equal to that of the rifle's barrel.
h. Muzzle jump and recoil are significantly reduced.
i. A gas relief port on the rear chamber of the suppressor permits operation without accelerating the gas blow back system of the rifle. This effectively reduces the gas blow back in the operator's face.

SECTION FOUR - Detail Specifications (See fig. 6)

a. Total length - 12.75 inches
b. Extension beyond muzzle- 8.82 inches approximately.
c. Diameter - 1.25 inches
d. Bore - .3020 inches
e. Total weight - 1 pound 8 oz.approx.
f. Material
   i. Internal parts,except muzzle retaining ring are 6061-T6 aluminum. (Parts 3,4,5,7,8,9,10,11,12,13,14 & 15)
   ii. Muzzle retaining ring is 4130 barrel steel (Part 6)
   iii.Outer casing is 4130 barrel steel (Part 1)
   iv. Rear retaining collar is fabricated from 6061-T6 aluminum (Part 3).

FIGURE 6

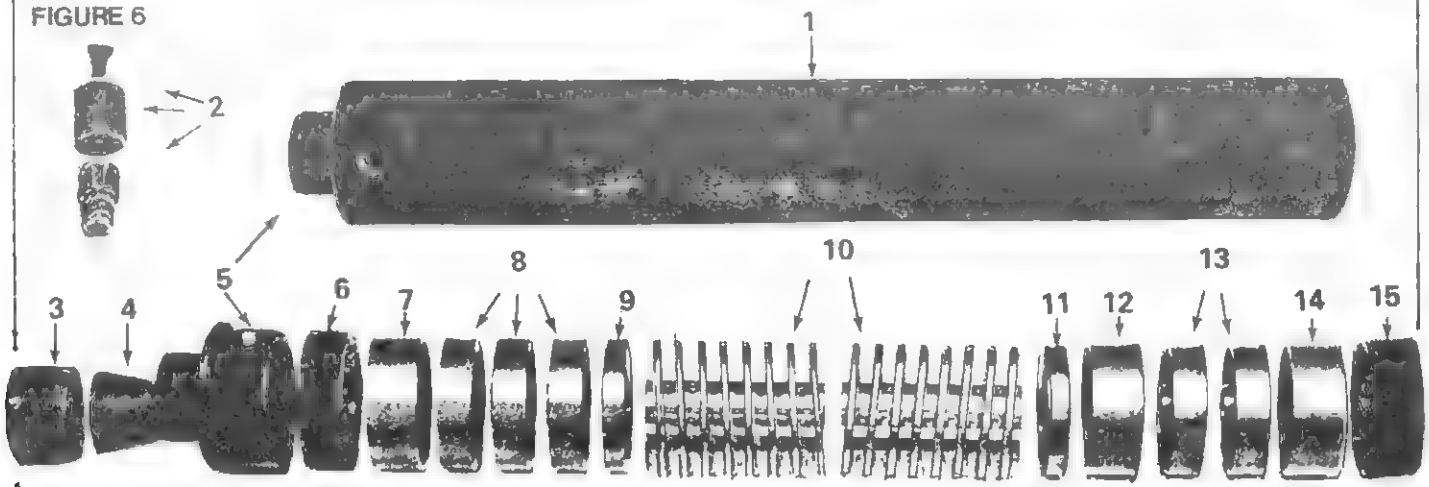

1. Outer Casing
2. Valve Assembly
3. Retaining Collar
4. Bushing
5. Back Plate
6. Muzzle Retaining Ring
7. Spacer
8. Three Gas Baffles
9. Encapsulator
10. Spirals
11. Encapsulator
12. Spacer
13. Two Gas Baffles
14. Spacer
15. Muzzle

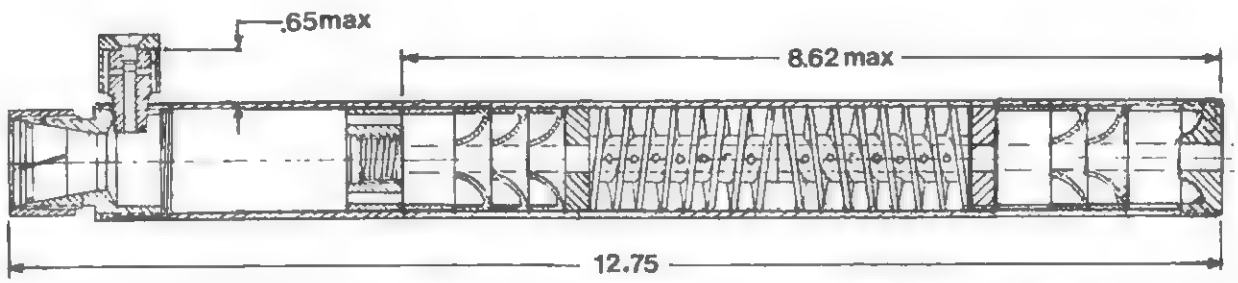

v. The bushing is soft aluminum or brass (Part 4) The M-16,AR 18 and Mini 14 each have their own specific bushing.

g. Tolerances

i. Since there are no moving parts, concentricity only is critical and shall be held within ± .002 inches (true indicator reading). All other tolerances shall be within normal commercial standards.

h. Finish

i. All external steel parts shall be protected from corrosion and rust by a black oxide coating, and aluminum parts by black anodizing, or a bake on finish (MG Coat, Gun Kote, etc.)

SECTION FIVE - Installation/Removal of Suppressor

To attach suppressor to rifle

a. Remove issued flash suppressor or thread protector from rifle muzzle with wrench and spanner.

b. Unscrew rear retaining collar and remove bushing from the suppressor assembly.

c. Slip on rear retaining collar and bushing over muzzle and push as far forward to the rear as possible.

d. Screw suppressor on threads of rifle muzzle until hand tight.

e. Insert the bushing in base of suppressor and screw on retaining collar until hand tight. It may be desirable to tighten the retaining collar slightly with a vice-grip when extended missions in the field are anticipated.

WEAPON IS NOW READY FOR OPERATION.

Note: After firing - check tube and collar periodically and retighten as necessary.

Removal: Remove unit in reverse order of assembly. Clean bore of suppressor w/ 38 cal. bore brush as needed. Shake out excess carbon particles.

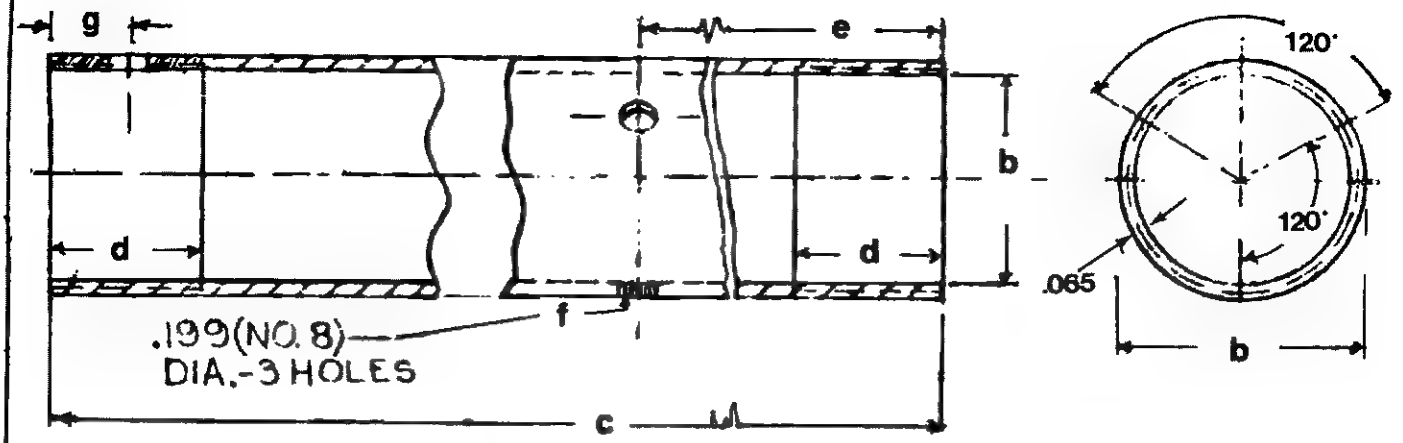

Part #1 - Outer Tube

a. Material-seamless 4130 annealed or welded&flashless ground(no inside burr) steel tubing.
b. OD-1.25/ID-1.120 .005 /.065 wall
c. Length - 11.75 ± .003
d. Threads-1.187x20 inside/.75 deep at each end.
e. Scribe circle around tube at a point 8.88 from front edge.
f. Mark,punch and drill three .2 dia. holes at 120°intervals on circle. Hole size and placement are not critical,they are for spot welding only.
g. Mark,punch and drill a .125 dia.pilot hole at a point .310 from rear edge of tube. Radial position is arbitrary.This hole will be drilled to .3125 after part #5 is in place.It is then threaded to accept part#2.

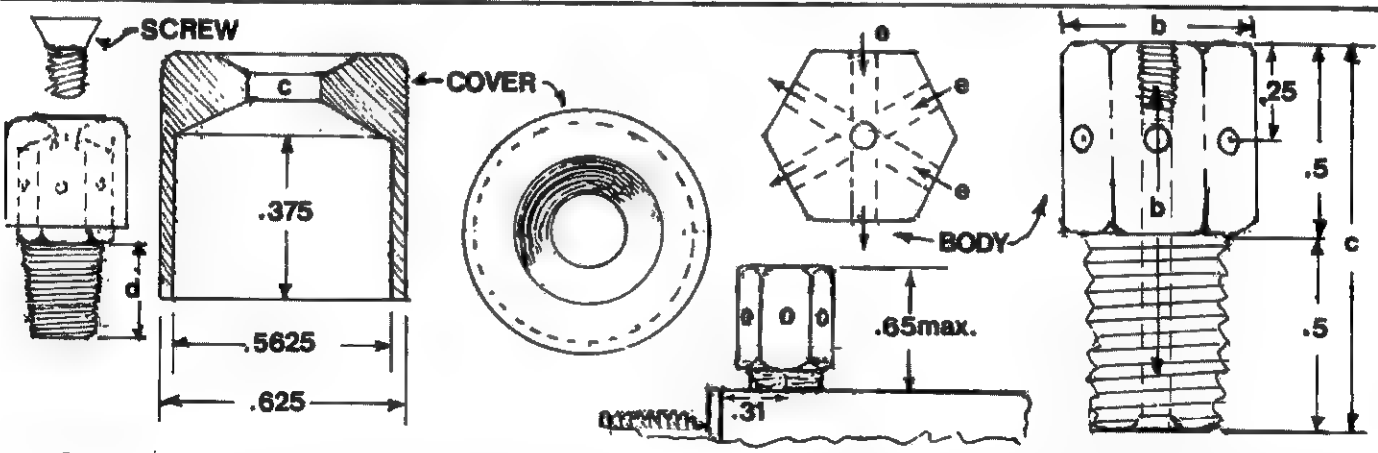

Part #2 - Valve Assembly - (Body, Allen screw, & Cover)

★ Body-

a. Material- 7/16" steel hex stock
b. OD - .5 max, ID-Drill full length w/#29 drill.
c. Length - 1.0/Polish to finished length - .95
d. Threads - Turn bottom half to .375 OD. Thread w/ 1/8x27 pipe die.Thread inside of top half for 9-24 size machine screw.
e. Gas bleed-off holes - Center punch and drill .0625 dia. holes through both sides of three adjacent flats. (Total of six holes)Place holes .25 from top edge,centered on each flat.

★Screw - 9-24 machine thread/length,.375

★ Cover-

a. Material-6061 T6 aluminum
b. OD - .625/ ID - .5625x.375 deep (full dia)
c. Drill .1875 center hole in top. Countersink top w/.375 drill or commercial countersink until screw head rests flush w/top of cover.

Assembly-

After body has been installed on suppressor,use allen wrench to secure cover/screw in place.

Part #3 - Collar

a. Material- 6061 T6 aluminum
b. Outside- 1.2 ODx.687 long
c. Inside- .937 IDx.625 deep
d. Rear wall- .062 wall thickness/.625 dia hole
e. Shoulder area beteen rear wall and threads- .062long.Shoulder ID tapers from .9375 front to .875 rear.
f. Inside threads- 1"x20x.56 long.
g. Finish external edges to .05r
H. Serrate .25 wide band around OD
i. Check #3 for fit w/completed parts #4 & 5.

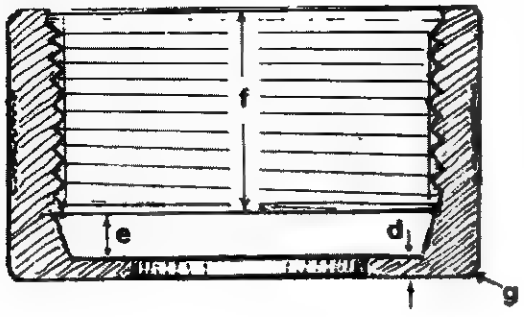

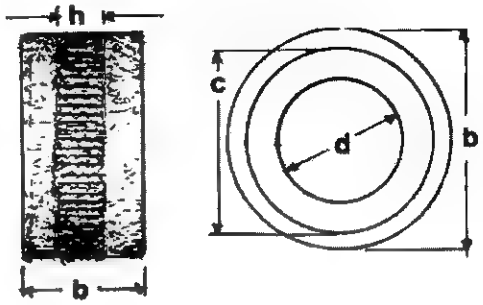

Part #4 - Bushing

a. Material-soft aluminum/brass or teflon.
b. ID- .575 approx. Hand fit to a snug slide fit on your barrel.
c. Length- .65
d. OD tapers from .87 to .65 . Taper rate is .375 per inch/4.5" per foot. Angle of taper is 22.5° total, or 11.25 from bore axis.
e. Cut .125 wide slot through one side, the full length of bushing.Angle slot 15° from bore axis.
f. Finish- Check for proper fit in .875 ID shoulder of #3 and for solid fit in bushing seat of #5.

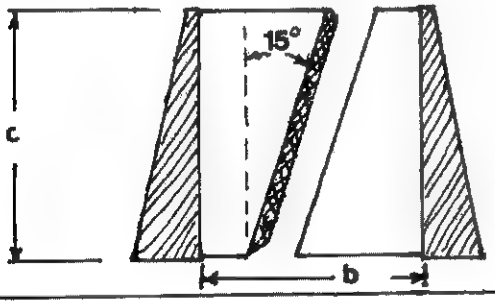

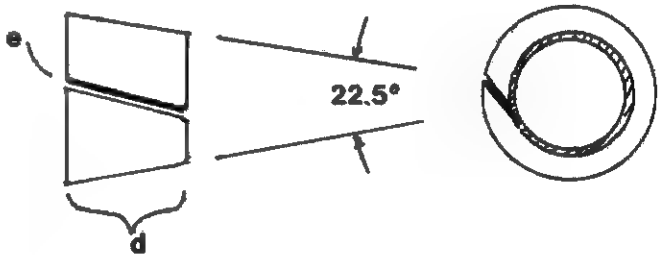

Part #6 - Muzzle Adapter Ring

a. Material- 4130 steel, annealed
b. OD- 1.110 ±.005 x .5 long
c. ID- .4531 drill/ ½ x 28 tap
d. Counterbore rear- .55 ID x .15 long. This aids in starting threads when installing on rifle.
e. Vent holes- 12, each .125 dia at 30° intervals. Hole centers are on a .4062 r. (.8125 circle) Hole size/location not critical.

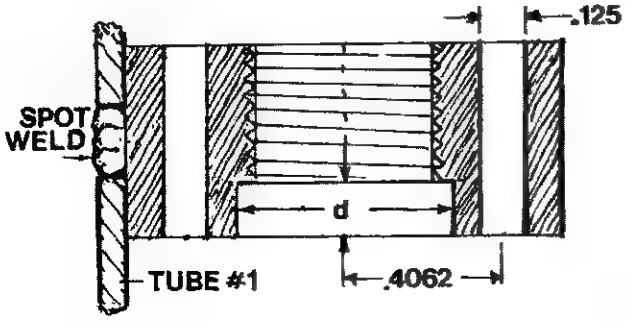

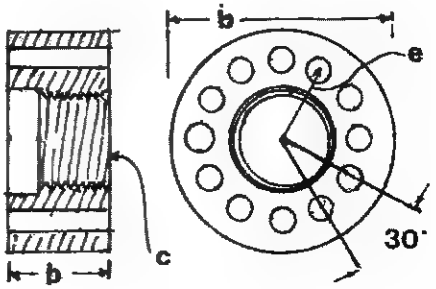

Part #5 - Backplate w/Bushing Seat

Material- 6061 T6 aluminum
Total length- 1.25
Outside diameters- (see drawing)
A. 1"x20 TPIx.435 long
B. .937x.125 long
C. 1.25x.065 long
D. 1.12x.125 long
E. 1.187x20 TPIx.5 long
Inside diameters-
F. Drill entire ID-.625 min.
G. Front ID- .5 long x 1.0 ID
H. Note 120° taper from 1" drill.
I. Taper bore rear ID to depth of .5, taper to match bushing #4 (.375 per inch) Max OD of taper- .8125 at rear.
Finish-
J. Bushing should protrude from rear of #5 approx. .1875 when installed.
K. Collar should compress bushing to a snug fit on barrel.
L. #5 should screw tightly into rear of tube #1, with shoulder flush w/rear of tube.
M. Finish #1 and #5 to same OD 1.25-.010

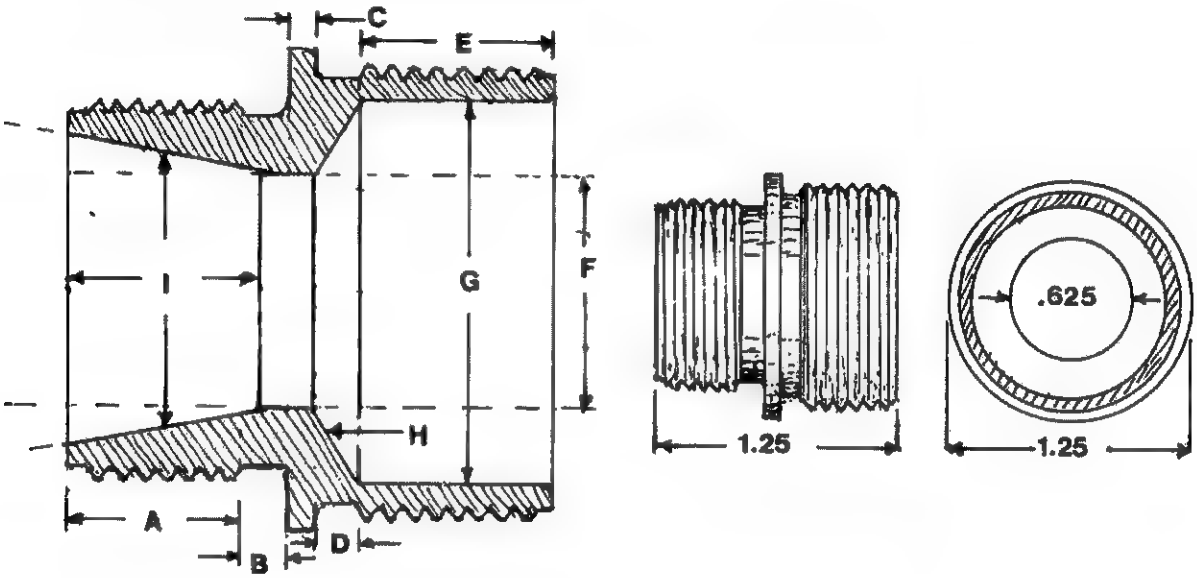

Part #15 - Endcap

a. OD - 1.187 x 20 TPI
b. ID - .2968 min/.3020 max
c. Length - .5625
d. Cone radius - .28
e. Wrench holes - .125 dia x .125 deep
f. Hole centers - .625
g. Finish - Check for flush fit w/front edge of tube #1.

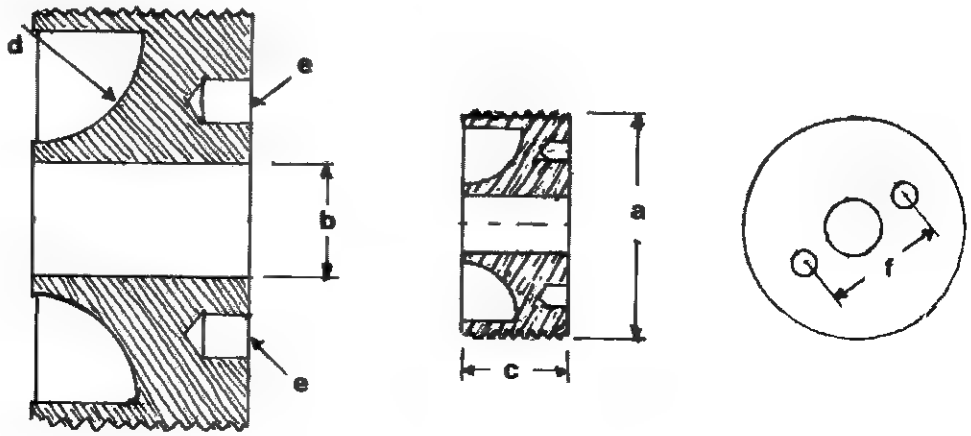

Parts #8 (three)and #13 (two)- Baffles
a. OD - 1.110 x .375 long
b. Drill ID .2968 (19/64)min./3020 (N drill) max.
c. Outer wall - .055
d. Outside cone r - .28
e. Inside cone r. - .35

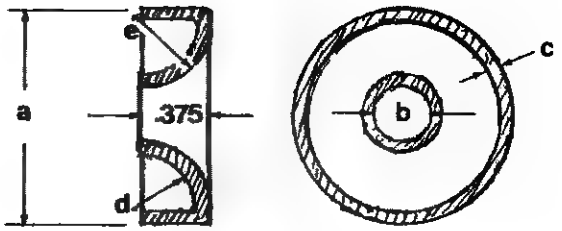

Parts #9 and #11 - Encapsulator
a. OD - 1.110
b. ID - .2812 min(9/32) .3020 (N drill) maximum
c. Thickness - .25

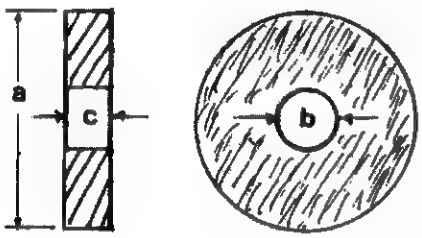

Parts #7,12 and 14 - Spacers
a. OD- 1.11/ID- 1"/.055 wall
b. Length- .5625
c. ID and inside burrs not critical.

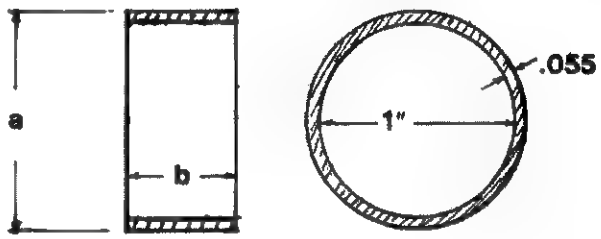

Part #10 Spirals-Left and Right Twist
a. OD - 1.110 ±.005
b. ID -.2812 min/.3020 max
c. Length - 2.0 each (or use 4 pieces 1" long)
d. Pitch - .25 (one turn in .25")
e. Table angle for milling cutter=86°
f. Fin depth / depth of cut-.30±.010
g. Core OD - .50 ±.020
h. Fin thickness- .075 (.078-.003
i. Fin spaces- .175 wide(.172+.003
j. Bleed holes- 28 holes,four rows of seven each per spiral.Hole dia -.125

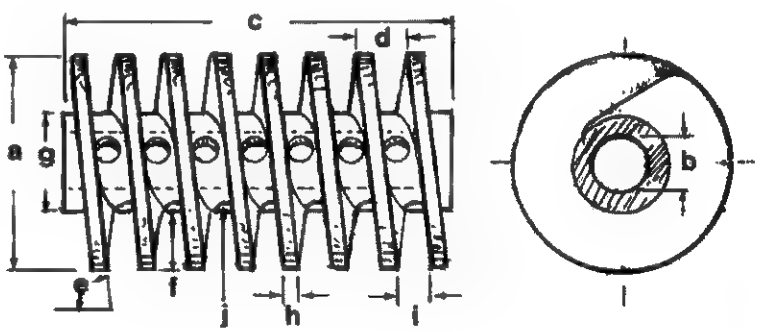

SECTION SEVEN - Suppressor Assembly

Note: Before attempting final assembly, check the fit and finish on all parts.

a. Assembly

i. Parts #6-14 should slide freely into tube #1.

ii. Assembly 3,4,& 5 should grasp the rifle's barrel when collar 3 is hand tightened.

iii.Part #5 should screw into the rear of tube #1 w/the rim flush against the rear edge of the tube.

iv. Part #15 should screw into the front of tube #1, and fit flush with the front edge of the tube.

v. Stack pieces 7-15 on a flat surface and measure the total length.Adjust the length of one or more spacers,#7,12, &14 as needed to achieve a maximum stack length of 8.62 inches.

vi. Disassemble and clean all pieces. Assemble suppressor in the following manner.

b. Slide pieces #3,4 and 5 onto rifle barrel as far to the rear as possible.

c. Screw part #6 hand tight onto the muzzle threads of the rifle's barrel.

d. Install part #15 flush with the front of tube #1. Insert pieces 14-7 into the rear end of tube #1, and slide them forward against the rear of #15.

e. Guide rear of tube assembly #1 over #6 on rifle muzzle. Slide tube to the rear until part #7 rests firmly against #6.

f. Slide backplate #5 forward and screw tightly into the rear of tube #1.
g. Insert bushing #4 into the bushing seat at the rear of #5. Slide collar forward over bushing and screw loosely onto rear of #5.
h. Move rifle/suppressor assembly to welding area.Pull the tube assembly to the rear against #6. Hold tube firmly in this position while tightening collar #3 snugly onto the backplate/bushing seat #5.
i. Maintain rearward tension on tube and spot weld it to part #6 via one of the three .2 diameter holes drilled for this purpose. Insert alignment rod (fig.7)into front of suppressor.Slide it to the rear until the rod enters the rifle's bore and the shoulder contacts the front face of the barrel. Alignment is considered acceptable if rod can be rotated easily without noticeable wobble or binding. Complete all three spot welds at this time. Grind welds flush with tube surface.

fig.7

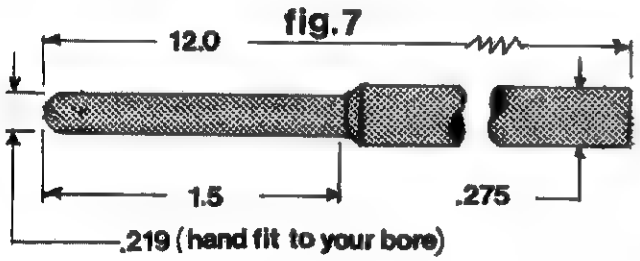

Note: If rod binds, reapply rearward pressure on tube and heat up the spot weld area. Bend tube into proper alignment and reweld. If misalignment is too great to correct by this method, drill out spot weld, disassemble the entire unit and recheck until problem area is discovered. Rework pieces as needed and start over with assembly step #b.
j. Remove the assembled and welded suppressor from the rifle, leaving the collar and bushing on the barrel. Unscrew #15 and remove parts 14-7 from the front end of the tube #1. Part #5 is left in place. Check that it is still tightened firmly into the rear of the tube.
k. Drill and tap tube and backplate for valve #2,using the 1/8" pilot hole in the tube as a guide. Run tap about half way into hole and remove. Test fit the valve body only (w/o cover) in the hole. Valve is fitted correctly when it is a tight fit (use endwrench) at a height of .65 max. above tube's surface. (see drawing). Retap to enlarge hole and recheck until fit is correct. Install valve cover & screw onto valve body.
l. Shake or blow out all debris from tube interior.
m. Arrange pieces 7-15 in the proper order and insert them through the front end of the outer tube.
n. Tighten piece #15 w/torque wrench to 30± 2 ft/lbs.
o. Hand tighten the finished suppressor onto the muzzle,insert bushing and tighten collar. Unit is now ready to test fire.

SECTION EIGHT - Notes on Additional Sound Control

a. Special Ammo

Although the suppressor will eliminate muzzle blast noise,flash and smoke, a super sonic crack will be heard when standard 5.56 NATO or commercial .223 ammo is used. If special circumstances dictate maximum sound control and allow for reduced range and stopping power,the crack can be eliminated by firing specially loaded subsonic rounds.

These loads can be worked up by handloading, or may be purchased commercially @ $1 per round from American Ballistic Co.(see subsonic ammo product review PMA Vol.2#2). The following data is supplied in their flyer.

5.56 (.223)Sniper Rifle Ammo
Bullet-70 grain,jacketed soft point.
Muzzle Velocity-1095 ft./sec.
Muzzle Energy-186 ft./lbs.
Rounds per box-10 (min.order 2 boxes)
Dealer price per 250 rounds-$101.00
Dealer price per box - $10.10

Contact American Ballistics Co.,P.O.Box 1410M, Marietta,GA 30061 for more info.

b. Locked Breech

The last step in maximum sound control is to modify the semi auto gas system by adding a gas cutoff valve. The valve is similar to the one used on the M-14 .308 rifle. When the valve is closed,the action functions in the normal semi auto mode. When open,the gas is diverted from the piston/operating rod, and the action remains locked until opened by hand.This modification has a two fold advantage for sniping type operations.Sound is prevented from exiting the open chamber and the expended brass may be removed and pocketed, not left at the "scene".

60mm Mortar /part 4

Baseplate, Bipod & Collar/Buffer Assembly

BY CLYDE BARROW

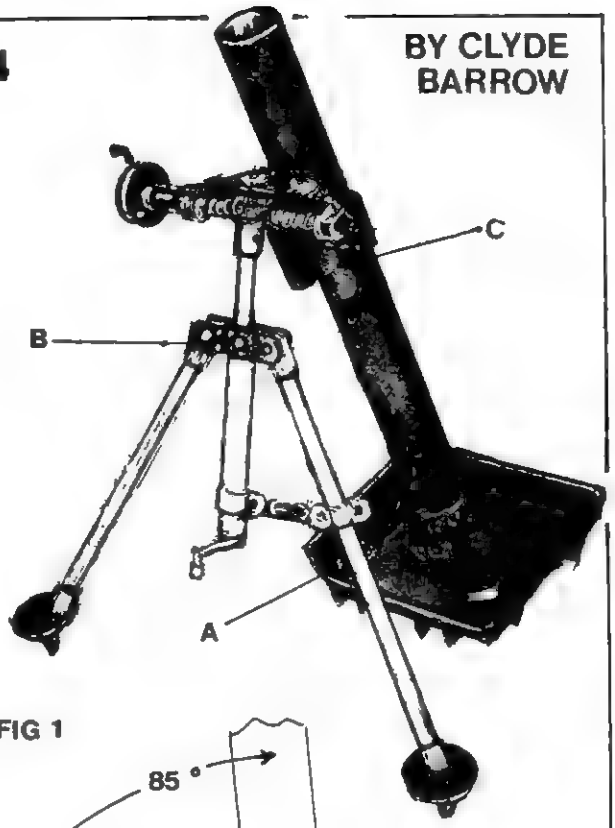

FIG 1

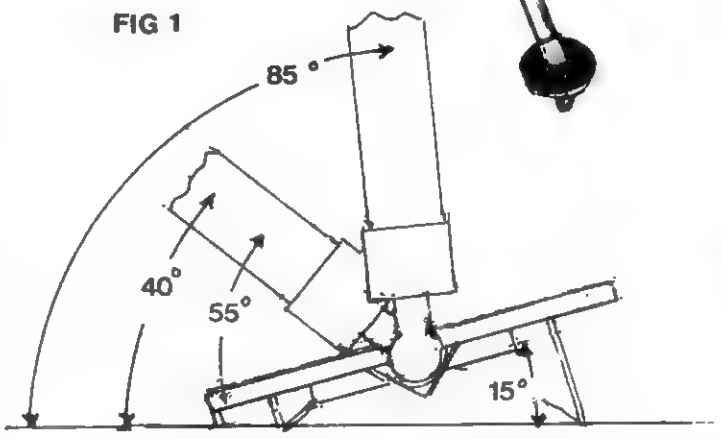

INTRODUCTION

Unlike the GI specs for shell and barrel production featured in Issue #2, the following part designs and dimensions are derived from several sources and are simplified for ease of construction. You should consider these designs as general outlines only. Each builder will undoubtedly find different materials and specs more suitable for one or more pieces.

The fifth and final section of this series, with all remaining building info will appear in Issue #4.

SECTION ONE - General Parts Descriptions

A. Baseplate

The baseplate is a sheet metal platform, 12" wide and 10" long. The front edge rests on the ground,while the rear is elevated approximately 15°.The plate intersects the barrel at 55°to 90°, depending upon barrel elevation.(see fig. one)

The upper surface of the baseplate's center is a recessed socket with a latching collar to accept and retain the round base of the barrel, which is free to pivot in all directions. When in use, the barrel may be adjusted vertically from 40° to 85°.Transverse or horizontal movement is 5" total, or 2.5" left or right of center, as measured at the transverse mechanism. The underside of the baseplate is fitted with four triangular feet that dig firmly into the ground to stabilize the mortar under fire.The front edge carries an additional row of four smaller feet that aid in stability.The four main feet,as well as the central socket area, are tied together and reinforced with several gussets and braces.

B. Bipod

The bipod consists of two folding tubular steel legs,hinged at the top and fitted with spiked feet at the bottom. The feet are provided with wide discs to prevent them from sinking into soft or muddy ground.The leg hinges are attached to the ends of a clevis joint to allow adjustment for initial leveling of the sight assembly when firing on uneven ground. Adjustment is made via a turnbuckle assembly which links the elevation tube to the left bipod leg.Crank operated screw mechanisms are provided for both vertical and transverse fine adjustment.

C. Clamping Collar-Buffer Assembly

This mechanism serves to join the bipod to the barrel. The assembly consists of an upper hinged barrel collar and a lower saddle section which houses the two buffer or shock absorber mechanisms.

The upper ends of the buffers attach to recesses in top section (yoke) of the bipod.The buffers prevent barrel recoil from misaligning or damaging the bipod assembly. This feature may be omitted if desired, as several examples of WWII mortars were produced with a rigid bipod/barrel connection.

BASEPLATE

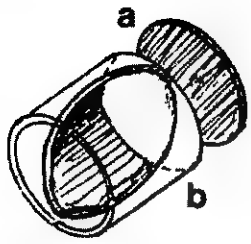

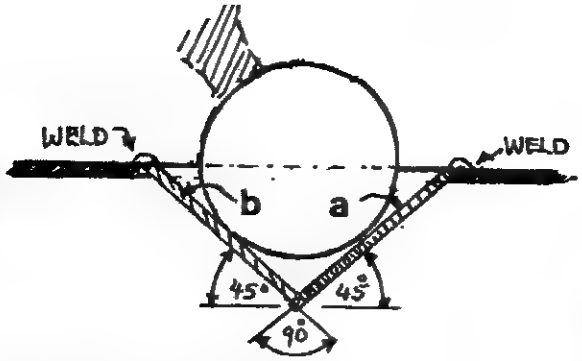

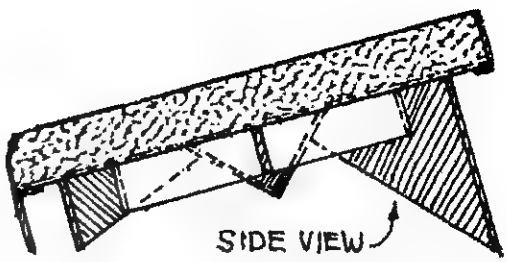

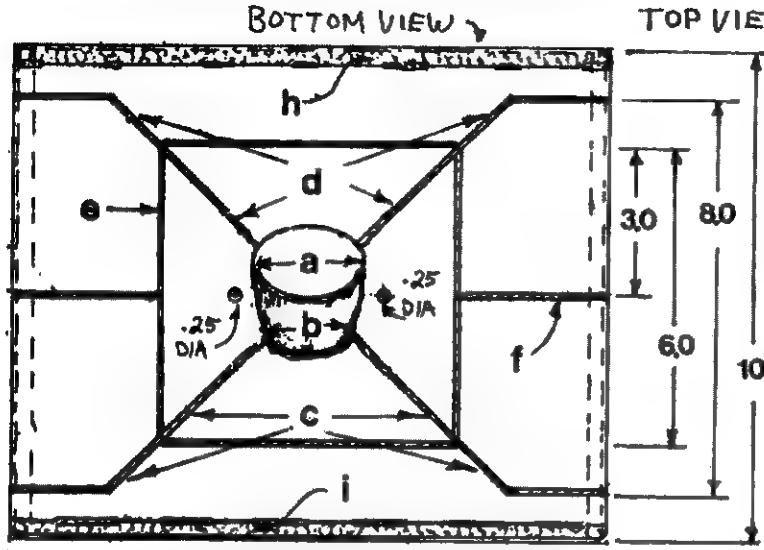

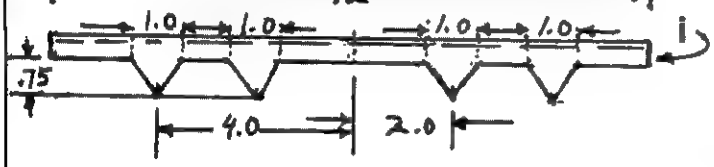

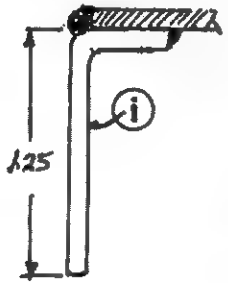

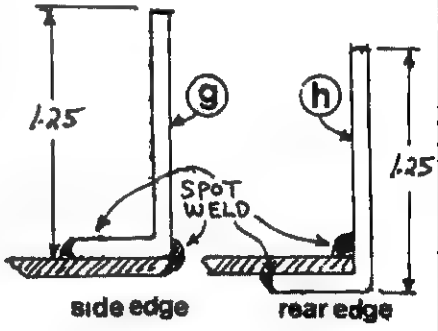

Baseplate Body-10 or 12 gauge steel, 10 x 12 inches.

a. 2.25 dia x .125 thick steel disc.

b. 2.25 OD / 2.00 ID x 2.25 long steel tubing. Cut on 45° angle after welding disc "a" in place. Weld completed assembly a-b into baseplate, disc to the rear.

c. Front Feet (two) - Cut from 1.5x7.0x .125 steel sheet. Bend 45° as shown and weld to baseplate and assembly a-b.

d. Rear Feet (two) - Cut from 3.5x7.0x .125 steel sheet. Same procedure as "c".

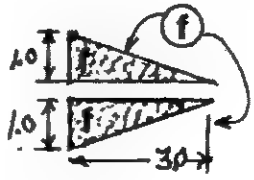

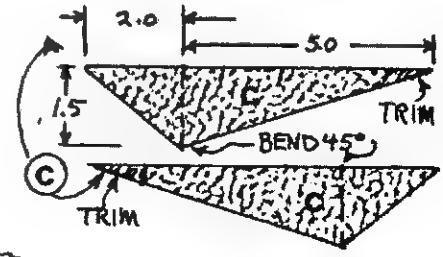

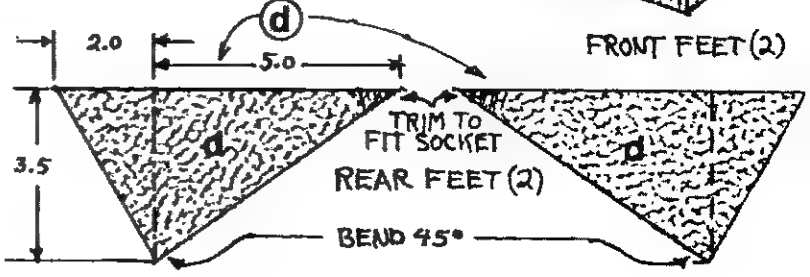

Cont. on pp 116

Baseplate-Cont. from pp 115

e. Brace (four)- 1.0x6.0x.125 steel sheet.Weld between legs to form a 6.0x6.0 box.Weld to both sets of legs and underside of baseplate.

f. Brace (two)-1.0x3.0x.125 steel. Weld to the two side pieces "e" and to underside of baseplate.

g. Rim/Sides (two)-1.25x.50x10. Weld to top of baseplate.

h. Rim/Rear (one)-1.25x.50x12. Weld to underside of baseplate and to rear edges of g . Round off front edges to .50 r.

i. Front Edge/Small Feet-1.25x.5x12. Make cut-outs to form four feet as shown. Weld completed unit to underside of baseplate.

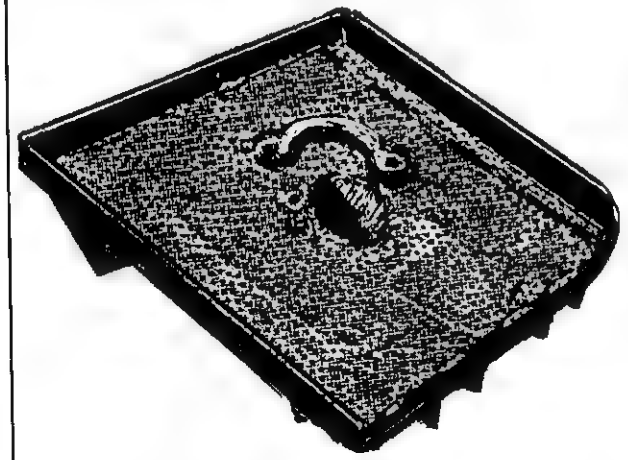

NOTE: Additional braces may be added if desired. Baseplate may also be produced as a one piece aluminum casting.Make pattern from .1875 to .25 thick styrofoam sheet.(see pg. 120)

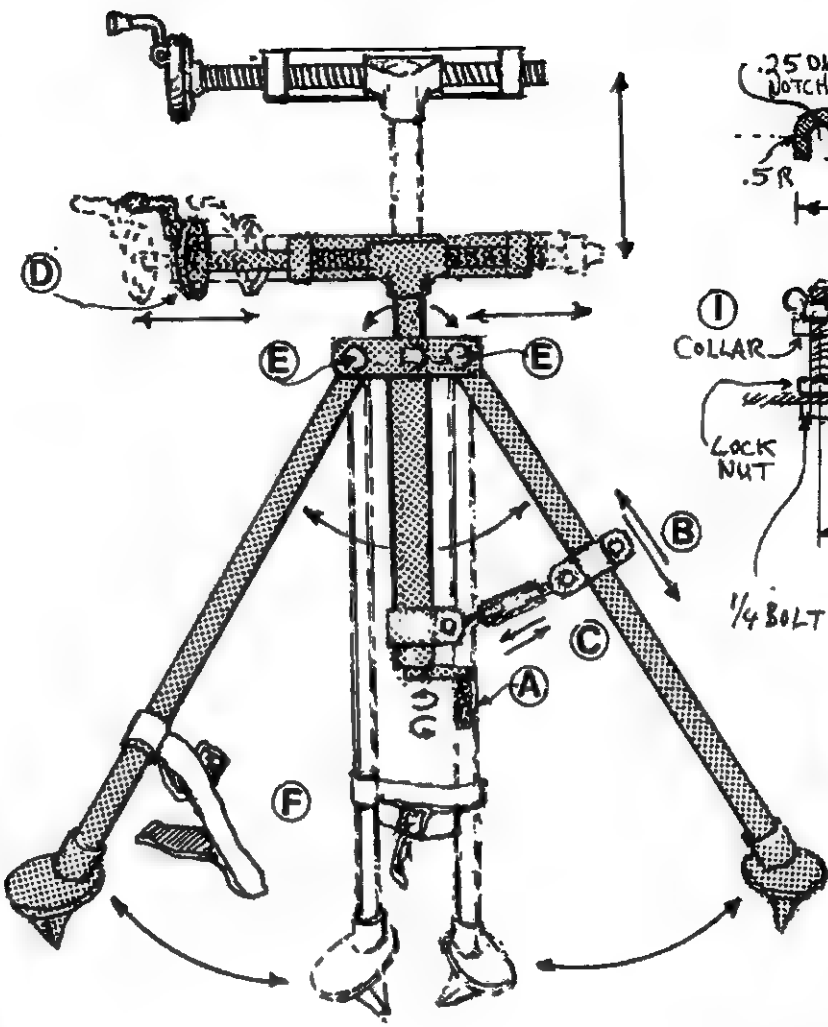

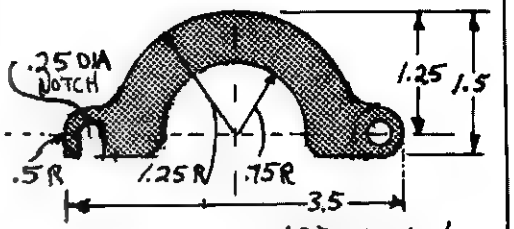

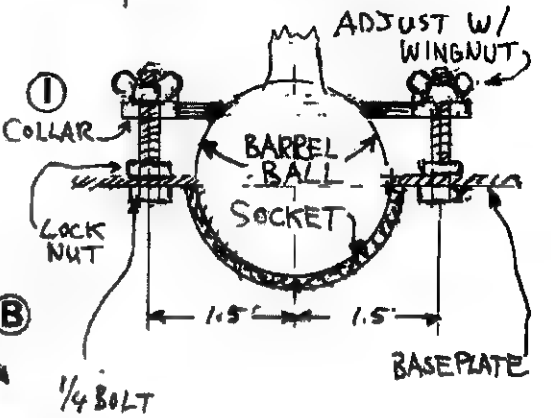

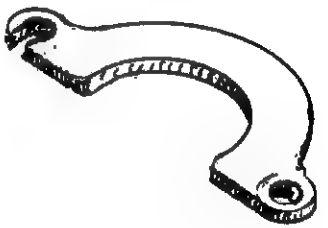

Movement / Adjustment Code

see PMA Vol.2 #4
- A. Elevation - Handcrank A
- B. Leveling - (Gross)- Turnbuckle - Leg Clamp B
- C. Leveling (Fine)- Turnbuckle C
- D. Transverse - Handwheel D
- E. Bipod Lock - Pivot Pins E
- F. Bipod Storage - Retaining Strap F

see pages 117-118
- G. Barrel / Bipod Joint - Clamping Collar G
- H. Recoil Absorption - Buffers H
- I. Barrel / Baseplate Joint - Retaining Collar I

CLAMPING COLLAR-BUFFER ASSEMBLY

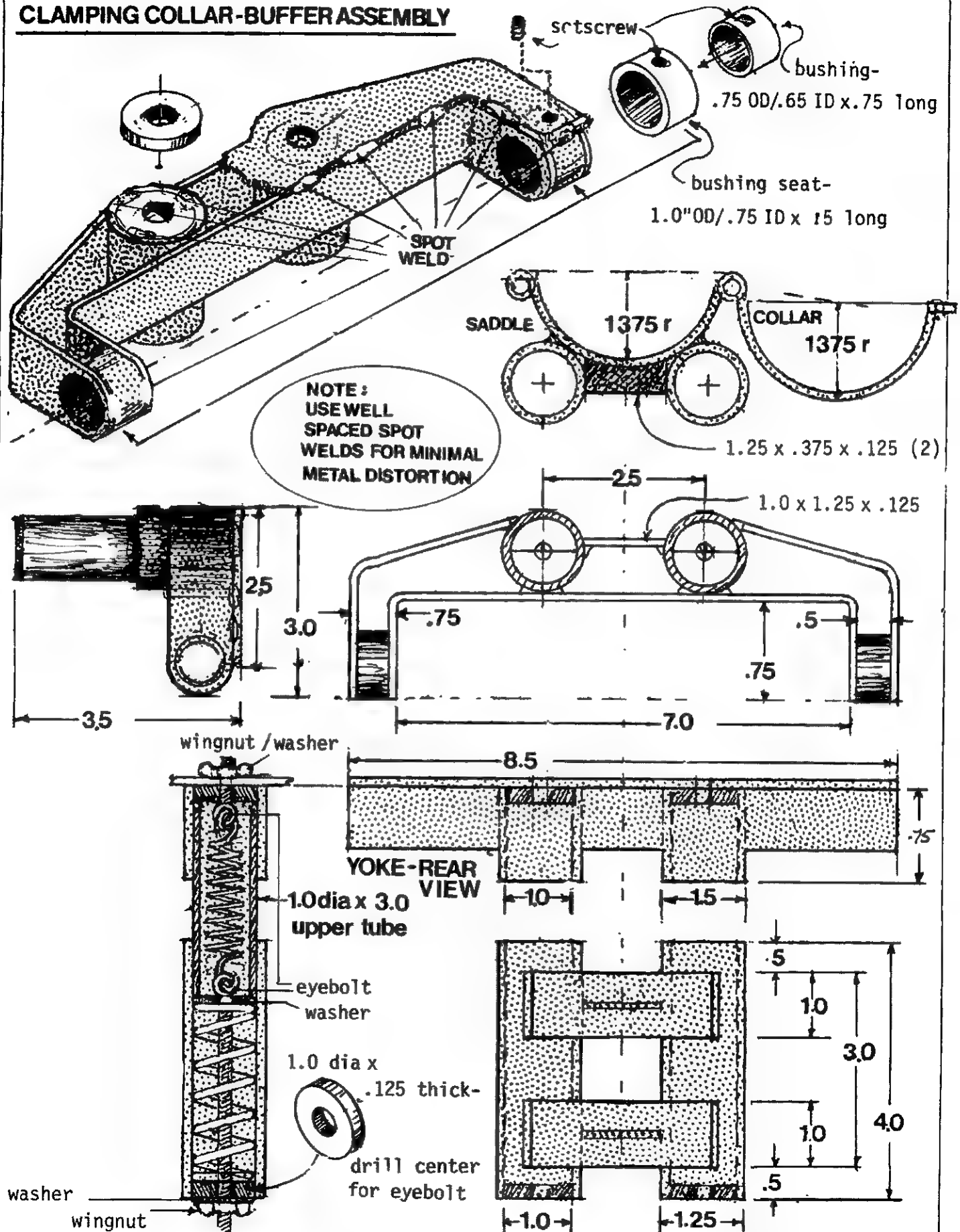

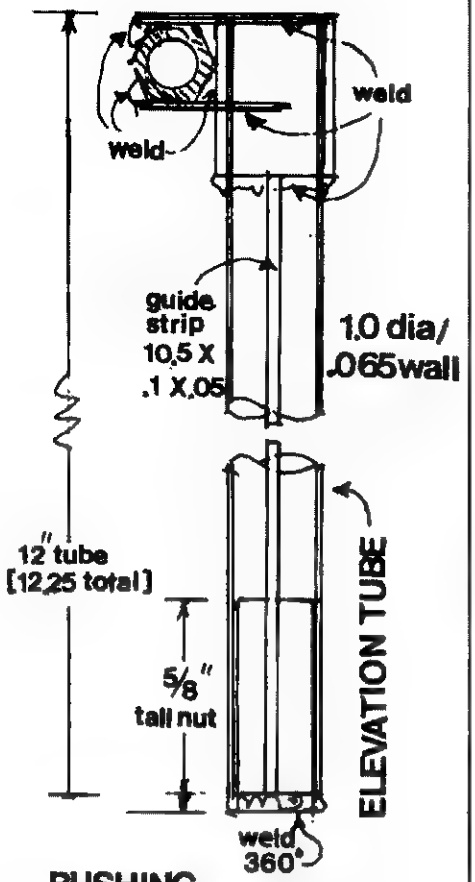
weld
weld
guide strip 10.5 X .1 X.05
1.0 dia/ .065wall
12" tube [12.25 total]
5/8" tall nut
ELEVATION TUBE
weld 360°

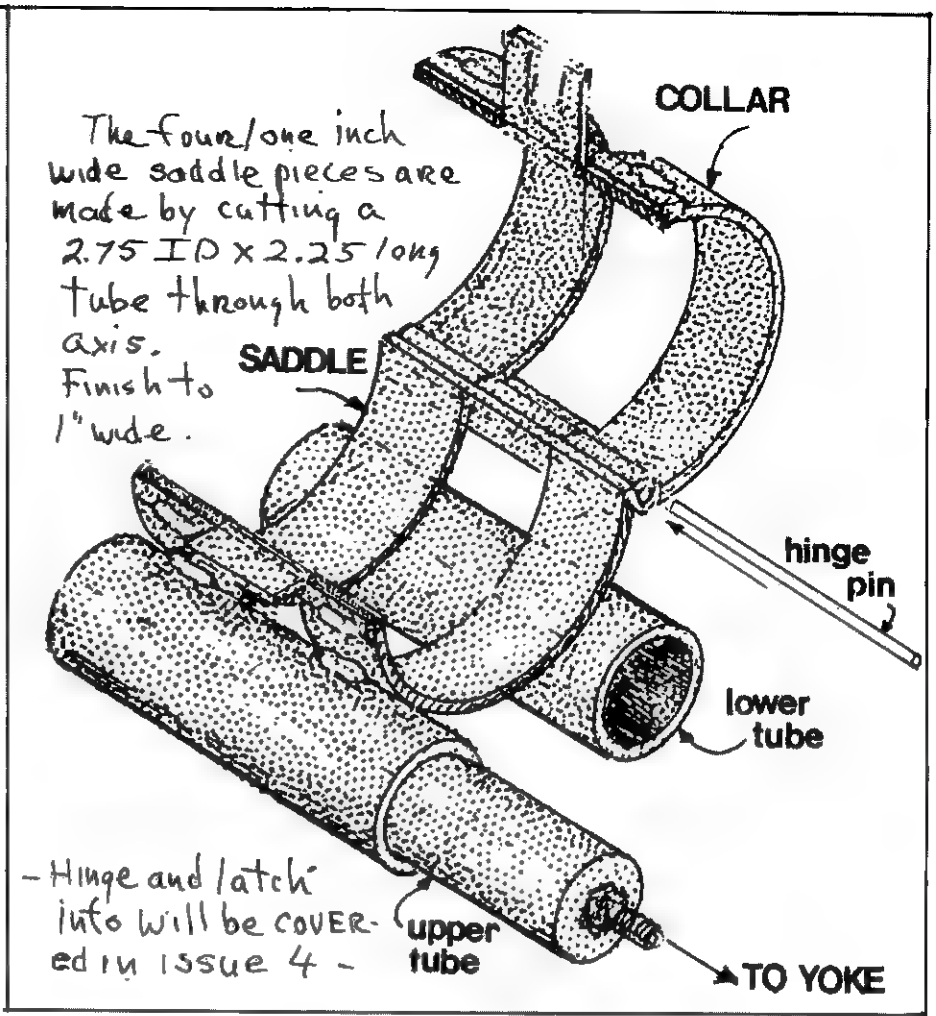
The four/one inch wide saddle pieces are made by cutting a 2.75 ID x 2.25 long tube through both axis. Finish to 1" wide.
COLLAR
SADDLE
hinge pin
lower tube
upper tube
TO YOKE
- Hinge and latch info will be COVERED in issue 4 -

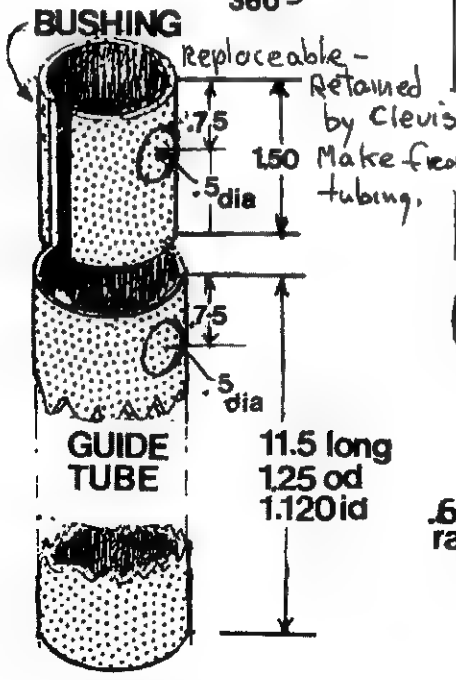
BUSHING
Reploceable - Retained by Clevis Pins, Make from brass tubing.
.75
.5 dia
1.50
.75
.5 dia
GUIDE TUBE
11.5 long
1.25 od
1.120 id

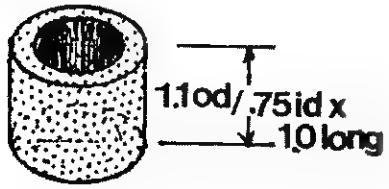
1.1od/.75id x 1.0 long
SHOULDER
Weld inside guide tube/ flush

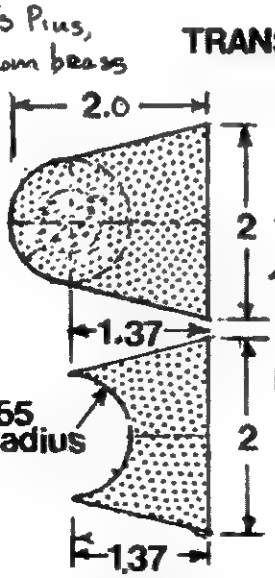
2.0
2 top
1.37
bottom
.65 radius
2
1.37

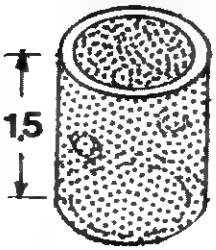
1.5

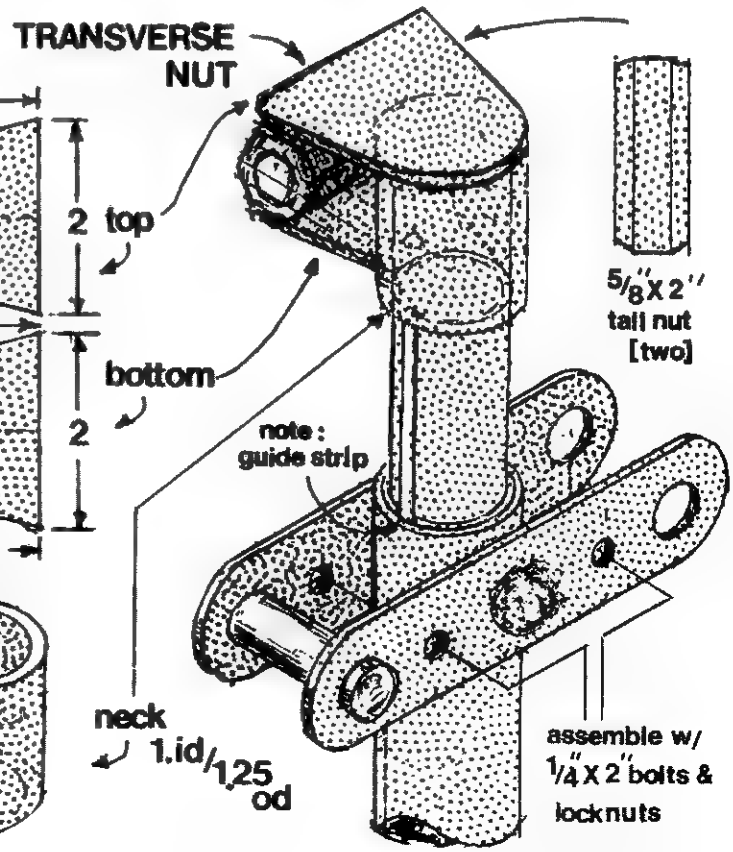
TRANSVERSE NUT
5/8"X 2" tall nut [two]
note: guide strip
neck 1.id/1.25 od
assemble w/ 1/4" X 2" bolts & locknuts

BIPOD ASSEMBLY

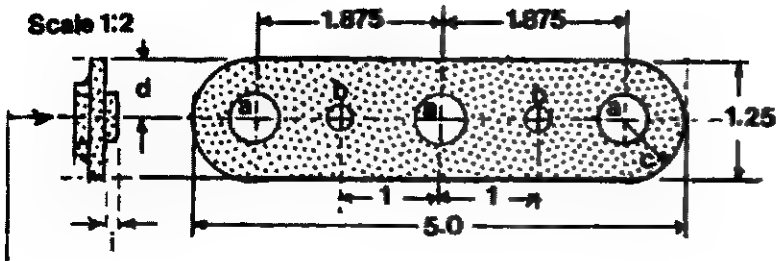

Weld one .245(max.length).5 diameter bolt in center hole of each plate. These act as pivot points for the elevation guide tube.

Clevis Plate - Mild Steel - Make2

- a - .5 dia
- b - .25 dia
- c - .625 radius
- d - .625
- e - .1875 dia
- f - .875 radius
- g - .125 thick
- h - 30°
- i - .120 max

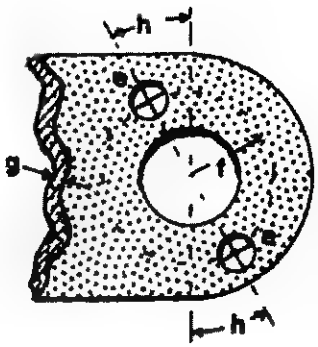

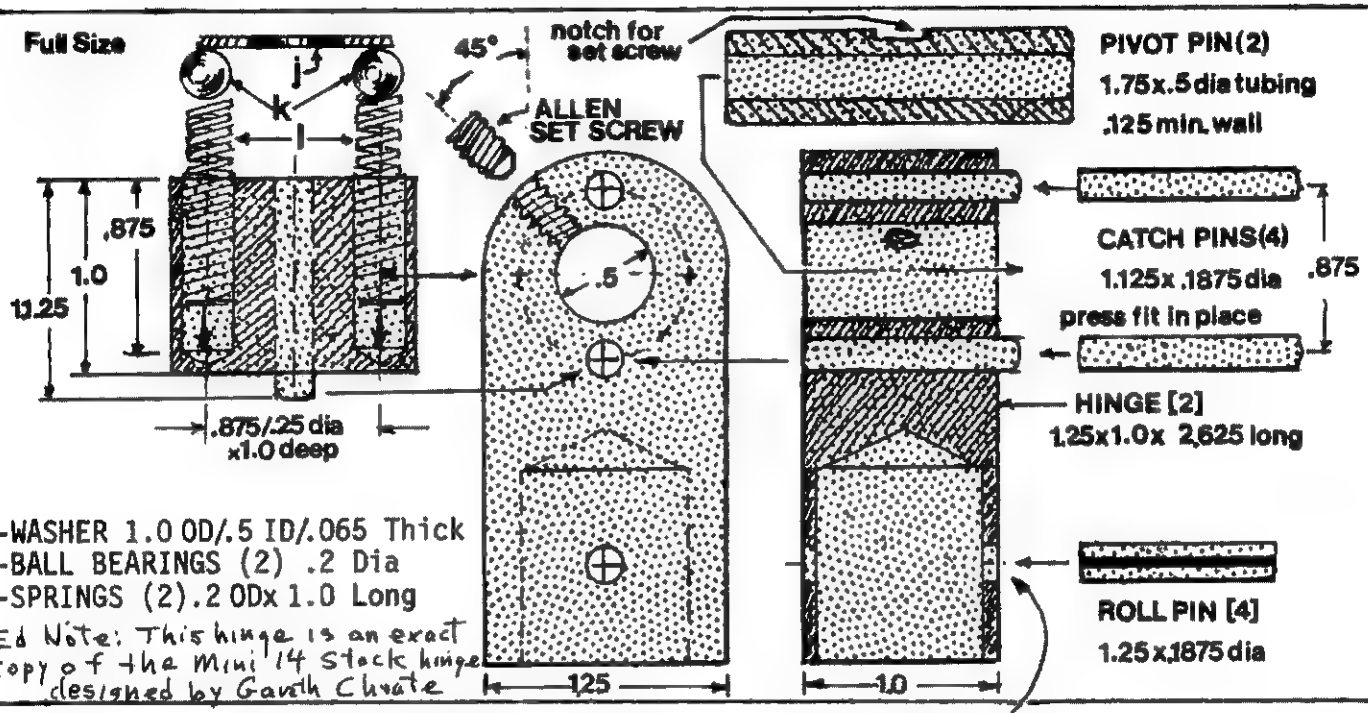

j-WASHER 1.0 OD/.5 ID/.065 Thick
k-BALL BEARINGS (2) .2 Dia
l-SPRINGS (2).2 ODx 1.0 Long

Ed Note: This hinge is an exact copy of the Mini 14 Stock hinge designed by Gareth Choate

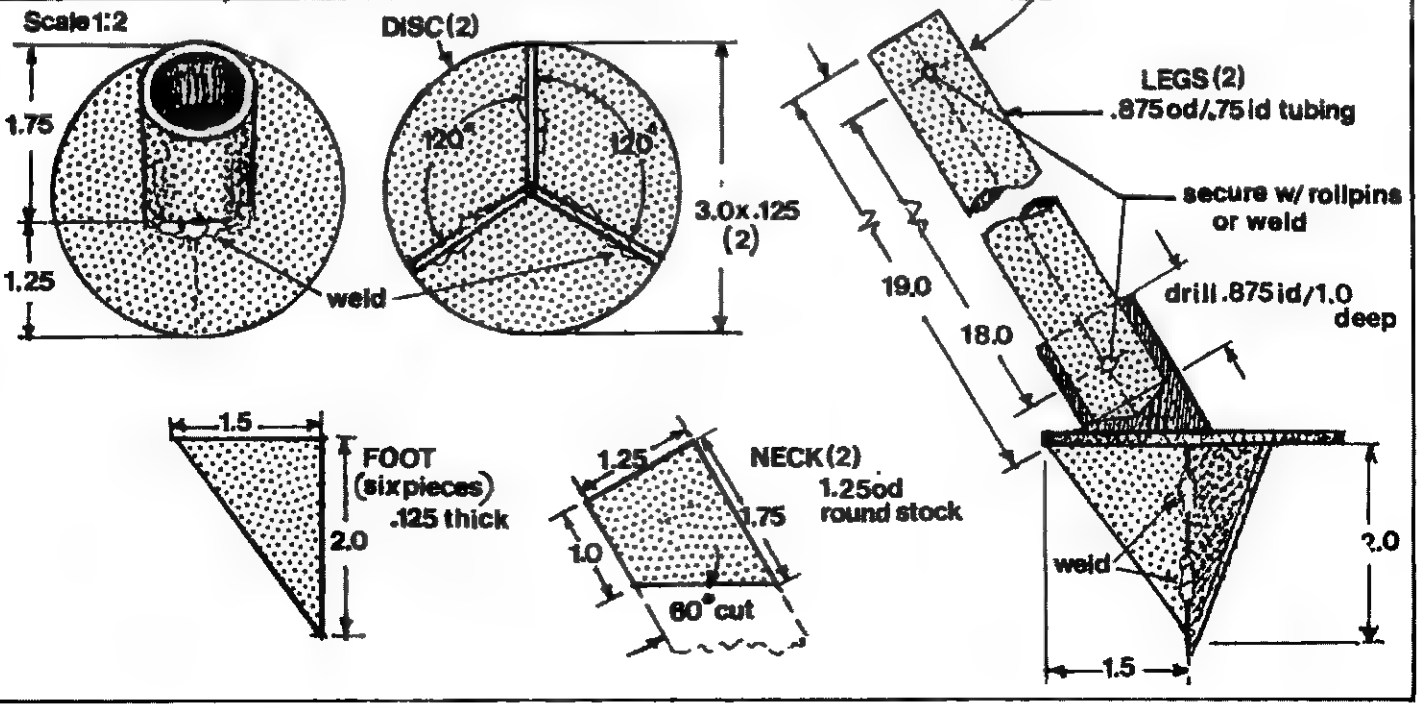

✦ Sand Casting w/Foam Patterns ✦

BY CLYDE BARROW

Note/ See: Working Aluminum, PMA Vol. 2 #2 for general info on traditional sand casting.

A - Introduction

Cavityless metal casting, also known as full mold or foam vaporization,was developed in 1956. The process allows you to produce complex shapes,including undercuts and hollows,without the bother of draft angles,multi-piece molds,suspended core sections, etc.

B - General Process

The original pattern is made from expanded polystyrene (styrofoam).The foam pattern is then placed in a casting flask and surrounded with casting sand. When the molten metal is poured, the foam is vaporized and the mold simultaneously filled. When cool,the completed casting is removed from the sand for finishing.

C - Sources For Foam

Expanded polystyrene foam known commercially as Styrofoam, is sold in blocks and sheets for building model airplane wing cores.These are available from hobby shops or by mail from model supply houses. Numerous shapes including balls,cones,rings etc.are sold for flower decorating and general craft use. These are found in any variety store. Foam packing containers may be picked up from department stores,usually for free.

Note: POLYURETHANE FOAM, the amber material sold commercially as A/B foam, or surfboard foam,will not vaporize and should never be used.Use only white POLYSTYRENE EXPANDED FOAM.

D - Patternmaking

The pattern can be shaped with traditional carving tools or cut to size with a nichrome hot wire cutter, available from model plane companies.Complex patterns are best cut out as simpler subunits. The pieces are then joined with spray adhesive or rubber cement. These glues will vaporize along with the foam.Surface blemishes in the finished pattern can be filled w/combustible wax filler if needed.

E - Sprue/Vent Construction

Before the pattern can be covered w/sand, a system of sprues,vents and risers must be added.These follow the shapes and layout as traditional casting setups. Cut all pieces out of foam and attach them to the pattern. When the glue is dry,the completed assembly may be placed in a molding flask or on a molding board.

F - Moldmaking

The mold is formed by surrounding the pattern with a shell of hardened sand.To eliminate pattern distortion from ramming, a cold setting(resin bonded or cement bonded) casting sand should be used. I have cast simple pieces from patterns rammed up in damp green sand, with only a slight amount of pattern damage. This method is acceptable for pieces that will be later machined to final shape.

When working with the green sand method, a simple system of vents can be created by lancing the completed mold/pattern several times w/a piece of sharpened welding rod.Do this just prior to pouring the metal.

G - Pouring Metal

Foam patterns can be used for castings in brass,bronze,iron or aluminum alloy. Be sure to produce oversize patterns to compensate for the shrink rate of the metal being used.Melt and pour the metal in the normal manner.When cool,the completed casting is broken or dug out of the sand and finished as needed.

H - Commercial Foundries

If you produce your own patterns to be cast at a commercial foundry,the foam process will save you a lot of headaches. If the foundry agrees to work with your foam patterns,you can easily produce them at home and store/ship them in cardboard boxes. Mold set up is faster so your cost will be greatly reduced.As a general rule, the finished casting can be produced in 1/5 the time required by traditional methods,and in most cases, the product will be as good or better than pieces cast in conventional sand molds.

VOLUME 2 NO.4

Published By
THE POOR MAN'S ARMORER
P.O. BOX 586, EUREKA, CAL. 95501

©Copyright 1981

The Only Magazine Of Improvised Weaponry

Compiled and Edited By
Bonnie&Clyde Barrow

Nurses Wear Grotesque Masks for Gas Drill

Popular Mechanics 1931

Looking Like an Assemblage of Monsters or Human Death's Heads, These Are Really English Student Nurses Being Trained in the Use of Gas Masks for Protection during Wartime Attack

When instruction was given English girl nurses recently about what to do in a gas attack by the "enemy," scores of pretty faces were hidden behind grotesque masks. The training course was a part of the nation's program for preparing the public for the terrors of war. Military experts expect poison gas to be used generally in the next war and European governments are training their citizens for defense.

PLEASE NOTE
Statement of Policy

We at the Poor Man's Armorer Magazine research, write, buy and sell information only. We do not buy, sell or manufacture weapons. All info in PMA is legal to possess, print, sell and send through the US mails.

All data is obtained from sources believed to be correct. The accuracy of any and all of the material in PMA cannot be guaranteed.

If you plan to build weapons,you should obtain copies of federal,state,and local weapons laws from the appropriate agencies,the local library or your attorney.

It is the sole responsibility of the reader to determine legality before building.

The Poor Man's Armorer Magazine and all contributors will not be responsible for any injuries or property damage that may result from the use of information or ideas found in PMA.

Letters to the Editor

Dear Clyde,

In reference to the grenade article in PMA Volume One. Your readers may be interested in the following information.

To re-arm practice MkII frag grenades, use shotgun primers rather than pistol or rifle primers to ignite the fuse. For the fuse, regular safety blasting fuse is preferable to cannon fuse, due to the quality control used in its manufacture. Also, coating or wrapping the fuse in order to prevent an early (and disastrous) contact with the bursting charge will increase the burning rate and so decrease the time delay, sometimes by as much as four fold. Needless to say, extensive tests should be made before constructing grenades for use.

If non-electric detonators or squibs are available for use as detonators for the grenade filling, these should be used rather than just a bare fuse-end as the initiator. Alternatively, roll up a small charge of match-heads in rolling papers and attach that to the fuse-end for more certain ignition.

Obviously, black powder can be used as a filling, but a flashpowder would be a little safer to use. If you've got a lot of time and stock in Ohio Match, you could also use match-heads. Rifle or pistol powder will need quite a flash to ignite properly, and will probably require a detonator or squib to work properly.

For instantaneous detonation of booby-trap grenades, tape a plastic soda straw on the fuse tube and fill it loosely with match-head material, closing the end with a plug of Kleenex or cotton. To prevent confusion, shorten the safety levers of the modified grenades.

All this information is from a reliable source who has dealt with such subjects for some time.

Erin go braugh

Over the years, numerous groups or armies have left "instant" detonating grenades behind to be picked up and used by the enemy. These were distinguishable from grenades with standard delay fuses only if you knew where to look, i.e. a small colored dot, notch, or similar secret code. *Ed.*

Clyde,

Enclosed is a drawing of an interesting item clipped from an FBI Law Enforcement Bulletin.

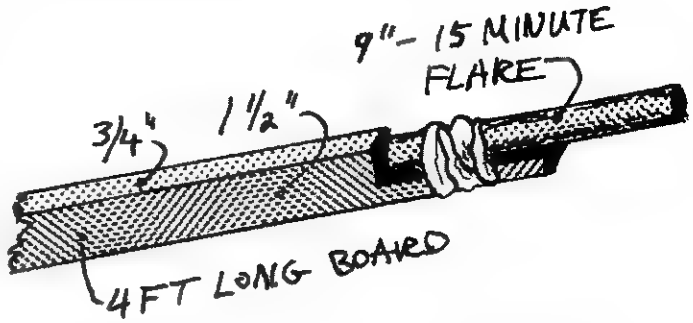

These devices were carried by demonstrators in a 1968 Washington Riot. Apparently they were never used (ignited) but the FBI considered the design significant enough to publish a warning that it was a possible weapon, "to be used against police or other demonstrators".

A Reader

Looks like a handy way to clear a path through a crowd. *Ed.*

classifieds

NUCLEAR WAR SURVIVAL BOOK by Duncan Long, 1980 edition...everything you must know to protect your family. Moneyback guarantee...$6.99...Postpaid...Hurry...it may be later than you think...Long Survival Publications, 163-PMA, Wamego, Kansas 66547.

Barrier Penetration Manual. This document, prepared for a government agency responsible for protecting nuclear facilities, describes the techniques to forcibly penetrate 32 barriers commonly found at industrial and commercial facilities using hand-carried, portable tools. Some of these barriers include: 8 inch reinforced concrete walls, steel lined doors, plywood floors, 1 inch lexan windows, cinder block walls, and security gates. Each entry consists of a description of the barrier, an illustration of it, the portable tools which will penetrate the barrier in the shortest time, estimated time for penetration, and references. $8 Postpaid. George Liu, 2000 Center Street, Room 100, Berkeley, CA 94704.

Clyde,

Your readers may be interested in the following info on NATO's "secret" Chobham/ Tank Armor. "Chobham" armor was developed at the Military Vehicles and Engineering Establishment in Chobham England. It is effective against APDS (Armor Piercing Discarding Sabot), Solid Shot, HESH (High Explosive Squash Head) and HEAT (High Explosive Anti Tank) ammos.

England couldn't afford to fit her own tanks with it, so they sold it to the Shah. Now the Ayatollah and presumably the Russians have it to examine.

Chobham must be bolted to the tanks outer plates.The armor is a sandwich construction with either (can't specify) ceramic fill or granular material(ball bearings?)for high dispersion of incoming forces. Not a panacea but it does enhance resistance. Multiple round hits in same area will penetrate.

Nothing much more to report except it's only a secret in the West now.

Sincerely,
JM

Bonnie & Clyde,

Love your magazine. In your article on the AR-7 night scope you should mention that Tasco makes a battery operated sight. The TascoRama. This sight can be bought to fit shotguns, high power and .22 rifles. It uses 2 G-13 watch batteries and costs about $56. I have mounted one on my 30 Carbine paratrooper, and it works just fine.

Also, why not use primers instead of cut down .410 shells in the land mines and grenades. I am also interested in plans for a high power folding stock crossbow. Keep up the good work.

JH-WI

PALADIN PRESS

AUTOMATIC & CONCEALABLE FIREARMS DESIGN BOOK VOL. I
An astonishing collection of automatic and concealable firearms designs available only from Paladin. Ten weapons are presented, seven of which are totally improvised. The others involve the modification of common semi-auto rifles (Squires-Bingham .22 and the AR-7) to function on **full automatic**. A fine resource book for hobbyist gunsmiths and machinists everywhere. Weapons presented also include The Stinger Special Silenced Weapon Mini-Shotgun Pistol and five more. 8½ x 11, 40 pp illus., softcover **$12.00**

Black Medicine II: WEAPONS AT HAND
by N. Mashiro, Ph.D.
Weapons at Hand presents 112 parts of the body that are natural weapons, largely because they are very injury resistant. Also suggested are more than 180 deadly makeshift weapons - all improvised from common items that can save your life in a crisis. Illustrated with 50 action photos. 5½ x 8½ softcover. 88 pp **$8.00**

AUTOMATIC & CONCEALABLE FIREARMS DESIGN BOOK, VOL. II
Ten new firearm designs including selective fire modification of the Colt .45 1911A1, the Heckler & Koch 91-93 and the Winchester Model 64 .22. Other unusual improvised weapon designs for the home gunsmith or machinist include the Revolver Knife .22 Knuckle Gun, 12 Gauge shotgun Pistol, M-n .22 Magnum Front Bolt Action Shotgun, .22 Short M-n Machine pistol and two more. The high quality drawings are all done to scale so that templates may be traced from most of them. 8½ x 11 softcover photos and diagrams. 56pp **$12.00**

HOME WORKSHOP GUNS I: "The Submachine Gun"
by Bill Holmes
Provides all the information you need to build a submachine gun in your home workshop, using improvised materials and machining methods. Explains step-by-step how to build each component of your weapon, then heat treat and blue it. 5½ x 8½, 140 pp illus., softcover **$6.00**

HOME WORKSHOP GUNS II: "The Handgun"
by Bill Holmes
Now available the long awaited sequel to Holmes first book **The Submachine Gun**. Included are two complete firearms designs, one for a semi or fully automatic pistol, the other for a single-shot falling block handgun. As with the first volume in this series, the author has written in a clear, simple style and provided photos and working drawings of each component needed to build the two handguns. 5½ x 8½, 140 pp illus. softcover **$6.00**

IMPROVISED MODIFIED FIREARMS
Two Volume Set
This fantastic two volume set features photographs of some of the most unusual firearms ever seen. Each volume contains hundreds of photographs collected from police and government files, firearms experts, collectors, terrorists and criminals from around the world. Both books, over 280 pp, over 300 illustrations. **The Set $17.95**

OTHER FASCINATING TITLES

- **Black Bag Owner's Manual I: "Spookcentre"** ..... **$ 6.00**
- **Silencers, Snipers, And Assassins** **$15.95**
- **Special Forces Handbook** ..... **$ 6.00**
- **The Complete Book Of Knife Fighting** **$10.95**
- **Underwater Demolition Training Manual** .. **$ 9.95**
- **Silencers For Hand Firearms** ..... **$ 9.95**
- **Deal The First Deadly Blow** ..... **$ 9.95**
- **Assassination, Theory And Practice** ..... **$ 6.00**
- **Special Forces Operational Techniques** ..... **$ 9.95**
- **The Quiet Killers** ..... **$ 6.00**
- **OSS Sabotage And Demolition Manual** **$12.95**
- **Unconventional Warfare Devices and Techniques** **$10.00**

DEALER INQUIRIES INVITED

PALADIN PRESS
PO Box 1307—PMA
Boulder, CO. 80306

Send $1.00 for latest PALADIN CATALOG!
Catalog free with any order.

Please send me the following titles:

Please include $3.00 for postage and handling.

NAME _____
ADDRESS _____
CITY _____ **STATE** _____ **ZIP** _____

Letters to the Editor

Dear Clyde,

A friend of mine loaned me a copy of your volume one edition of The Poor Man's Armorer. I would like to compliment you on your publication. I have never encountered anything as detailed.

On page 124 of Vol.1, you have an article on a Homemade Missile. As I have designed,built,and flown rockets for the last twelve years,I think that I have a few ideas that will improve your design,and make it a little cheaper at the same time.

A. You use four "tandems",that is,two rocket motors glued together so that the second burns through the first.As it happens,a friend and I did extensive testing of Estes "D" tandems.We found that the lower engine tends to burn through the casing just above the nozzle unless you fiberglass the entire area.

There is a cure,the FSI F-100 series.This motor (F-100)is just a little larger than two Estes "D"s.It is a quarter of an inch wider and a half inch longer.It weighs a little more than two "D"s but here is the main plus. Two "D"sgive 20lb.thrust(taking in the plus by using the first engine as a combustion chamber).A single "F" gives 35lb. thrust. Another plus,the "D" burns for 1½ sec. per engine, this means that you are using most of your power simply to hold the rocket up against the pull of gravity, this leaves very little power for acceleration. The three seconds of burn time also gives your target,if mobile,time to spot and evade it. The F-100 however,gives all 35lbs of thrust in 1/2 second.The only bad point is that it also makes a large cloud of white smoke at the launch area,about the same as two "D"s.As Estes "D"s are running about three for $3.75 and F-100s cost 3 for $11.00,a three engine "F" rocket will cost $11.00 for engines, give you 105 lbs of thrust for 1/2 sec. A four tandem "D" rocket will give you 80 lbs of thrust in 3 seconds. The "F"s give you 25 lbs of extra thrust, two to three times the range,and 1/3 less total weight.

B. I have designed,built and tested an F-100 powered rocket 18 inches long and a little over an inch in diameter This rocket lifted a one pound dummy warhead to an altitude of about 455 feet and delivered the warhead six tenths of a mile downrange, missing the target (an unused road)by thirty feet. The launching rod was just stuck into the ground and eyeballed. An F-100 powered rocket with a ten second delay was tracked to an altitude of 1086 meters, payload however, was only four ounces.

When you work with high power,such as four "D"s or higher,balsa wood is a NO-NO. Use ¼ inch plywood (found at any hobby shop)or larger. It is stronger,less sensitive to water, shock and general abuse.I do not want to set up and find that I have a cracked or warped fin. I also use fiberglass and epoxy. CMR sells fiberglass sheets,a company called KYBE sells a roll one inch wide by about25 feet. It is used by computer companies to clean magnetic tapes. Check with any data processing company,you may be able to get used rolls free (it has iron oxide on it). Comes in handy for lots of things.

If you would like, I will supply readers with a diagram of both the designs.

Question: Instead of a command circuit,why not either put in an adjustable timer (solid state)or just use the ejection charge to set off an airburst or backup detonator? The F-100 comes with; zero,four,six,eight, and ten second delays. Save money and weight over the radio command destruct. Also,the "F" uses what is called an electric match to ignite it.This little jewel will go off from the power of a watch battery. It saves a little weight and you can build your power pack into the rocket and just hook up to it.

Sincerely,
DRD-Texas

DR

Thanks for the helpful comments. I'm sure PMA readers will be interested in any further information you can provide on these designs. Clyde

sound suppressor kits

by 'The Armorer'

Information on how to build a Sionics sound suppressor (aka silencer) for the Ingram M10 and M11 appeared in PMA,Vol.2, No.1. That article featured machinist drawings so that a person with access to a lathe and other machine shop tools could turn out each suppressor part including the spiral diffusers. Information was provided on how to construct suppressor tubes out of thin aluminum sheeting since the properly dimensioned tube blanks are difficult to obtain. Commercial tubing wholesalers usually have a minimum order requirement and local retail shops rarely have what you want in stock.

Since the publication of that article, at least a half-dozen firms have gone into the business of selling M10 and M11 suppressor components so that now one can put together a complete, functional unit with a minimum of effort.

It is a violation of federal gun control laws to possess all the parts to assemble a suppressor without prior approval from the Bureau of Alcohol, Tobacco and Firearms.

Consequently, these firms sell either the internal suppressor components or the outer tubes, or the components and tube blanks which require some machine work before they can be assembled into functional units. There are no legal restrictions on owning a set of outer tubes or a parts kit, so one can purchase these items directly from the firms without any special license or permit. These kits are priced around $120 to $130 at the time of this writing, and can be purchased from these firms: Military Accessories Company, Chris J. Sullivan Co., and Survival Enterprises of Georgia.

What good is a parts kit without the two tubes to house these components? The following firms sell the front and/or rear tube(s): J.H.Trager, SMG Marketing, and Survival Enterprises of Georgia. Depending upon from whom you purchase, the front tube will be blank or will be machined to the original Sionics specifications and contain internal threads. The price of the front tube is about $20 to $30. The rear tube is typically sold as a random length blank so it will need to be cut down to the correct size with a tube cutter or hack saw. The rear tube does not require any threads, and can be purchased for approximately $10.

Parts kit - $120. Front tube - $30. Rear tube - $10. For $160 one has a suppressor identical to the Sionics unit which currently carries a suggested retail price of $200 plus a federal transfer tax of $200.

The Military Accessories Company sells suppressor parts kits for several other firearms: M16/AR15 rifle, M14/M1A rifle, and the Colt Woodsman autoloading pistol (the suppressor for this firearm can be easily modified to fit several other .22 caliber automatic pistols).

Send a SASE to the following firms for specific product and price information.New sources for these and related items are constantly advertised in Shotgun News.

J.H. Trager, Box 23174, Detroit, MI 48223 - - - - - - - M10/M11 suppressor tubes

Military Accessories Company - - - - - M10/M11, M16/AR15, M14/M1A and Colt Woodsman suppressor parts kits
2675 Cumberland Parkway
Atlanta, GA 30339

SMG Marketing, 120 N Ave.N.W., - - - - - Tubes for: M10/M11, M16/AR15, M14/M1A, and Colt Woodsman
Atlanta, GA 30303

Chris J. Sullivan Co. - - - - - - - - - M10/M11 suppressor parts kits
2671 Sharondale Dr. N.E.
Atlanta, GA 30305

Survival Enterprises of Georgia - - - - M10/M11 suppressor parts kits, suppressor tubes
Box 41668, Atlanta,GA 30331

vehicle armor fabrication & installation

by Clyde Barrow

fig.1

ARMORED PATROL AND ESCORT VEHICLE, 4X4

I - Introduction

The following information on armor production is restricted to materials and processes that can be easily handled by the individual reader. Large scale projects such as cast steel gun turrets and welded plate tank bodies require industrial resources not available in the home workshop.

II - Design Criteria

When properly designed and installed, armor should protect both the occupant(s) and the internal components of the vehicle itself. Five factors must be considered when designing armor protection for a given vehicle.

If possible, choice of the vehicle itself should be determined by its ability to carry the necessary protection,while still functioning as intended.If for some reason,the specific vehicle type has been predetermined,the following factors must be balanced against each other to achieve optimum results.

A - Level of Protection

Whether by application of field research data or an educated guess,a specific decision must be made concerning the nature of the anticipated attack. This alone dictates the type and amount of armor needed, even if other factors require that you later settle for a lower level of protection. Note that some materials in Section IV have established thickness specifications for providing various levels of protection. Non-rated materials will have to be tested against the appropriate weapons to determine the proper thickness needed. The ideal test fixture is an old car door, similar to those on your vehicle.These are available at any junkyard. Mount the armor samples in the appropriate location and sandbag or mount the door to a rigid backstop. Most testing standards require that the material hold up to multiple hits concentrated into a fairly small impact area.Be realistic when testing, you're only cheating yourself!

E - Cost

Except in rare cases where money is no object,most armoring projects will be limited primarily by cost. The vehicle shown in fig. 2 offers complete Level 4 Protection (resists penetration of multiple 30.06 rifle rounds). The price as delivered including initial vehicle cost,is between $65,000 and $75,000. Note that factors A-D were given full consideration, and cost was considered the least important aspect of the total design package.

Although kind enough to supply the material in figures 1 and 2, VSDC declined to provide any further data on their armor for reasons of client and product protection. They would say that ArmaCore and Sierracin/TransTech materials are not offered for sale except as integral components in their vehicle conversions.

fig. 2

DISCREETLY ARMORED VEHICLE

The product of thousands of hours of research, engineering and development, Vehicle Systems Development Corporation (VSDC) proudly introduces a new line of inconspicuous, discreetly armored vehicles for the 1980's. Incorporating a number of unique, exclusive features, the design is based on the IH SCOUT II and employs VSDC's patented, and patents pending, ArmaCore™ composite armor construction, and features a ballistic bulkhead (patents pending) affording integral roll over protection. An important feature of the bulkhead is the maintenance of the ballistic integrity of the passenger compartment with the tailgate open, permitting the accommodation of oversize cargo and retaining the utility of the basic vehicle. The standard glass is replaced with Level IV transparent armor manufactured by Sierracin TransTech in accordance with VSDC's specification. It is the only material of its type capable of performing equally well against ballistic attack and direct physical assault.

The completely engineered design and the distribution of opaque and transparent armor results in front and rear axle weight loadings consistent with the vehicle manufacturer's basic layout. This feature, particularly in terrorist ambush situations, provides for precision handling, and excellent acceleration and braking. Armored conversions of the International Harvester SCOUT TERRA pickup and SCOUT TRAVELER have also been developed by VSDC.

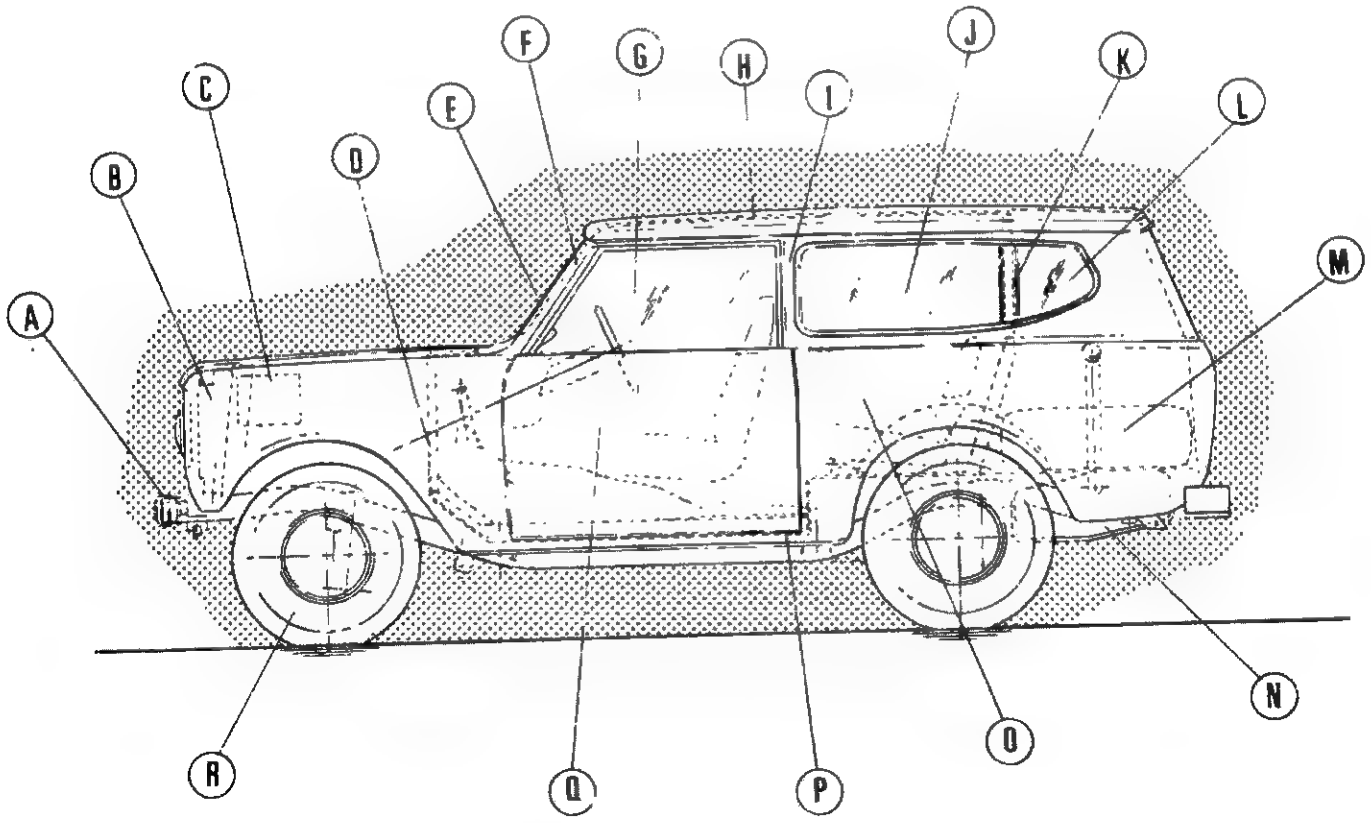

FEATURES —

A. Steel reinforced ram bumper
B. Radiator protection
C. Protected battery
D. ArmaCore firewall armor
E. Level IV bullet resistant windshield
F. A pillar ArmaCore protection
G. Bullet resistant Level IV side door glass
H. ArmaCore roof protection
I. ArmaCore B pillar protection
J. Level IV bullet resistant rear side glass
K. Ballistic bulkhead/roll bar with Level IV bullet resistant glass and ArmaCore
L. Simulated vent pane
M. Cargo area and spare tire access through conventional tailgate
N. Explosion-proof fuel tank/skid plate
O. Rear side panels of ArmaCore construction
P. ArmaCore floor armor
Q. ArmaCore door panels
R. Heavy duty tires with proprietary sealer

VSDC VEHICLE SYSTEMS DEVELOPMENT CORPORATION P.O. BOX 356 - UPLAND, CALIFORNIA 91786 - U.S.A.

III - Traditional Armor Materials

There are three general types of vehicle armor; rigid (hard), flexible (soft), and transparent (window) armor.

Prior to the 1970's,the following were the most popular materials for use as armor in light vehicles. Although not as desirable as the newer products outlined in section IV, these materials are certainly better than nothing. They should be used whenever the current exotic materials are not available.

A - Rigid Armor

1. Low Carbon (Mild) Steel Plate- Cheap,easy to work with but very heavy.

2. High Carbon & Special Alloy Steels- Heat treatment of the completed part allows use of thinner material. Lighter than #1, but also more expensive to produce.

3. Ceramic Plates (Ceramic Bathroom Tiles) Gives excellent protection from small arms fire, but because the plate shatters upon bullet impact,the area is left unprotected from subsequent attack. Homemade ceramic armor is inexpensive, with a fairly good weight-to-protection ratio. The drawback is the need for immediate repair of the impacted area. This requires that the armor panels be accessible for rapid replacement of damaged units.An adequate supply of spares should be on hand.

B - Flexible Armor

A number of fiber/fabric materials including industrial felting,untreated fiber glass cloth and "ballistic nylon" have been used in attempts to produce a soft armor material for interior door panels, headliners, seatbacks, etc. Even nylon, the most successful, isn't worth a damn. None of these attempts at "soft armor" can be expected to stop anything more substantial than slow moving, fairly large pieces of shrapnel. This was made painfully clear to the Viet Nam era soldiers who mistakenly assumed that their ballistic nylon flak jackets were suitable body armor.

C - Transparent Armor

1. Bullet Resistant Glass

Commonly referred to as "bullet proof", these custom made windows are usually made from specially formulated, break resistant laminated glass. Although very effective at stopping low powered projectiles, the more powerful rounds tend to shatter the inner layer. Even if the bullet itself is stopped, a deadly spray of glass slivers and fragments is often torn from the glass surface, causing serious driver/passenger injury.

BR Glass is often several inches thick, and therefore not only very expensive to make, but expensive to install because of the modifications that must be made to the mounting flange and rubber. Another drawback to glass this thick is the incredible weight. Its weight is listed at 23 lbs. per sq. foot. A VW sedan windshield, constructed from this material, would weigh over 80 pounds!

2. BR Acrylic Sheet

Acrylic plastic sheet (Plexiglass),has been used as an alternative to BR Glass. Although similar thicknesses are needed for comparable protection,a great deal of weight is saved. 1-3/4" BR Acrylic sheet weighs about 11 lbs. per sq. foot, a reduction of over 50%. Unfortunately,the ballistic performance is similar to BR glass. Good protection is provided from lower power rounds, but impact from high power weapons again results in a hail of shattered acrylic particles. *These pieces are X-Ray transparent-a surgeon's nitemare* It's not much compensation,but Acrylic is substantially cheaper than BR Glass.

IV - Recently Developed Armor Materials

Recent discoveries in the fields of plastics and synthetic fiber production have resulted in materials with excellent armoring properties. These new products are being used not only as individual armor pieces, but also in combination with other materials.These composite applications allow the designer to choose the type of armor most suited to the design criteria outlined in Section II.

A - Rigid Armor

Aluminum Alloy-
More costly than steel sheet,aluminum alloy panels offer comparable protection with a significant reduction in weight.

2. Laminated Ballistic Fiberglass Panels-
This material is available commercially under the trade name ARMET. Note that in the ARMET factory info sheet (figure 3) these panels are intended for home or office wall installation. ARMET is also readily installed in vehicles and should offer equal or better protection levels than those listed.The increased protection is the result of the projectile having to first penetrate the vehicle's outer skin.

fig. 3

ARMET
OPAQUE ARMOR

ARMET opaque armor is a specially laminated ballistic fiberglass which has numerous security applications and is easily installed in new or existing structures. If visible, ARMET panels can be decoratively finished by painting, covering with contact bond wood veneer, vinyl or other available materials, or left natural.

ARMET can be cut on-the-job. For best results, a band saw using a 1/2" Remington tungsten carbide blade or a carbide impregnated skil-saw blade may be used for ripping long panels. ARMET can be drilled with a standard twist drill.

Panels may be attached to each other or to studs by first drilling a proper sized lead hole and attaching with self-tapping sheet metal screws. Panels may be attached to wood with nails by first drilling the proper sized holes. Overlay batts will be provided when necessary to cover butt joints.

SPECIFICATIONS

	ARMET II	ARMET III
Thickness	3/8"	1/2"
Weight	3-1/2# p.s.f.	4-1/2# p.s.f.
Natural Color	Beige	Beige
Standard Sizes	3' x 8' 4' x 8'	3' x 8' 4' x 8'
Surface	ARMET can be installed with either side facing out with no change in ballistic value. (Ballistic information upon request)	

COST

Price per square foot	$18.00	$25.00

Factory cutting to dimensions will be computed to next even square foot with a $5.00 cutting charge for each piece.

Delivery is made 20-30 days after receipt of order. All orders must be accompanied by a 50% deposit.

For further information, please contact:

PROTECTION DEVELOPMENT INTERNATIONAL CORPORATION
25801 Obrero Drive, Ste. 3
Mission Viejo, CA 92691
(714) 951-1171
Cable: "PRODEV"

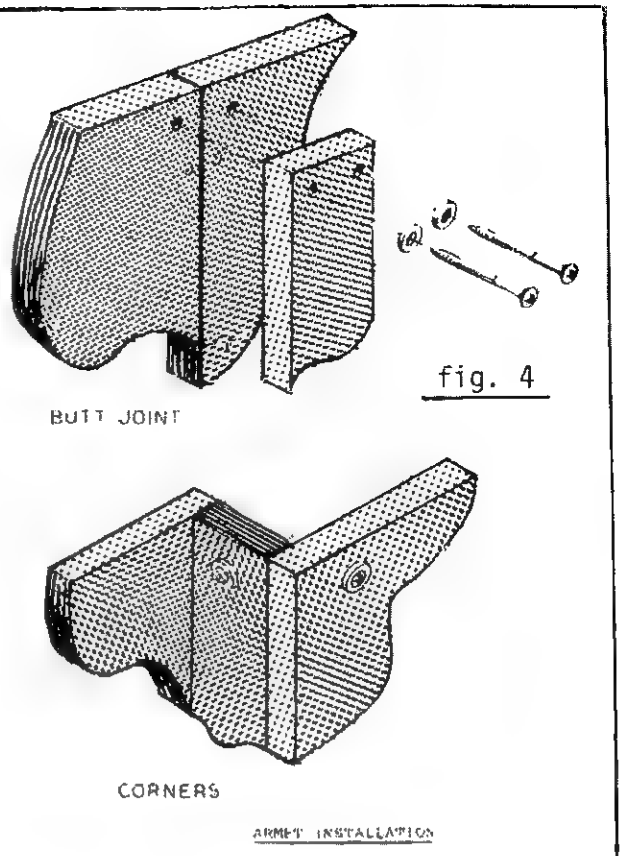

fig. 4
ARMET INSTALLATION

ARMET panels tested at 20 feet, firing at a 90° angle (straight on,for maximum penetration) resisted multiple hits from the following weapons.

ARMET II - 3/8" thick :
22 rimfire rifle, 45 ACP rifle, 38 spec, 357 mag revolvers, 9mm auto pistol, 4" barreled 44 magnum and 9mm UZI submachine gun.

ARMET III - 1/2" thick :
Same as ARMET II with the addition of protection from 44 magnum fired from 6½" barreled S&W revolver. (Apparently,this barrel length/ammo combo will penetrate ARMET II).

Figure 4 shows the factory recommended installation procedure.

For higher levels of protection,various combinations of ARMET II & III can be combined and tested to determine panel thickness required to resist shotgun slugs and high powered rifles. See figure 5 for projected specs on multilayered ARMET installations.

Figure 5	Thickness/inch	Weight-lbs per sq/ft	Price-sq/ft
ARMET II	3/8	3.5	$18.00
" III	1/2	4.5	$25.00
" II + II	3/4+	7+	$36.00
" II + III	7/8+	8+	$43.00
" III + III	1"+	9+	$50.00

3. Opaque "Lexan" Polycarbonate Sheet-
Note: For general info on "Lexan", see Section IV-C on transparent armor.

Although used primarily as window material, the less expensive opaque grades of Lexan sheet can be used in numerous vehicle body applications. Flat pieces are cut and mounted following the manufacturer's specs outlined in Section IV-C. Sheet stock can be thermoformed with either a strip bender or vacuum forming machine, following standard procedures for forming plexiglass. Lexan is also available as a liquid resin for casting three dimensional pieces. Detailed info on thermo forming and casting are available from GE.

4. Custom Made Laminated Panels -
Whitewater boat builders have recently developed a number of cloth and resin combinations, termed "impact resistant composites".

These new composites are stronger than the old polyester resin/"E" type fiberglass cloth laminates.

Two types of cloth are used. The first is "S" type fiberglass, superior to "E" type cloth sold to the public. The second is Kevlar 49, the same aramid fiber fabric used in Second Chance Flexible Body Armor. Both types of cloth are treated or scoured to make the surface compatible with a variety of laminating resins, including vinylester, polyester and epoxy.

Fig.6

Kevlar® 49 S - Glass
E. I. du Pont
Bag Molding Supplies
"Advanced Fabrication Techniques for Whitewater Boats" parts 2 & 3
Free Catalog
WA CLARK ASSOCIATES
Sugarloaf Star Route, Boulder, Colorado 80302
(303) 444-1890

These special fabrics plus information on various laminating and vacuum molding techniques are available from WA Clark, the leading supplier to the white water boat trade.(see figure 6) When contacting or ordering from Clark, be sure to specify that the materials are for boat or kayak building. Clark will not sell these materials for use in armor production, either from fear of liability for product failure or possible restrictions placed on them by the factory.

A simple molding setup for panel making is shown in Figure 7.Although the example is for flat panels,conventional plaster or clay molds can be made to custom shape a panel to fit a particular area.Consult the WA Clark catalog or how-to sculpture books for detailed mold making info.

Use the specs given in the ARMET section to determine panel thickness,modifying these dimensions after testing if necessary.

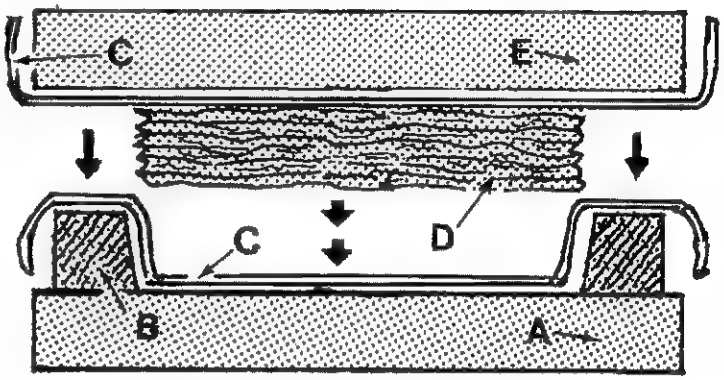

Fig.7 A-Base, B-Side, C-Plastic, D-Molded Panel, E-Top

The molding frame is made up of two sheets of ½" plywood,with a framework of 1" wide x ½" thick plywood strips attached to the base.Note the bevel on the strips to facilitate removal of the finished panel.To use, cover both top and base w/plastic garbage bags or similar sheets of polyethylene plastic.Fill the mold with successive layers of cloth saturated w/catalyzed resin. Roll or press each layer to remove trapped air and excess resin. Fill mold slightly above the edge and install top panel. Press, clamp or weight the top in place until the resin has cured.The more pressure the better. When cured,the mold halves are separated and the panel removed. The plastic will peel right off, leaving the surface ready for further cloth and resin or final painting.This eliminates the traditional sanding of the wax finish coat usually required in fiberglass work.

In addition to the sources listed above, bookstores usually have how-to books on building or repairing "glass" hotrod bodies. These techniques are easily applied to armor making.

5. Fiberglass Reinforced Ceramic -

Unlike the simple ceramic tiles outlined in Section III-A (#3),a fiberglass cloth/ceramic composite will absorb repeated hits without breaking up or deteriorating.Armor panels can be produced in both standardized flat rectangular sheets and as custom contoured pieces for installation in quarter panels,roof pillars, curved floors etc.

The basic techniques used to mold,cure and fire the clay panels are identical to standard pottery and sculpture procedures. A great number of how-to books exist that give detailed instructions for home pottery production, including complete info on building an inexpensive backyard kiln.

The only unique aspect of this type of ceramic work is the addition of chopped strands or small strips of fiberglass cloth to the wet clay body. This can be done with a rolling pin for flat or "slab" work. Cloth pieces may be dipped into liquid or "slurry" clay and laid up in layers inside slipcast (mold produced)pieces.

Just about any type of low or medium fire clay body can be used. The critical element is maintaining the heat of the firing kiln at or below Cone 6 (about 2174°F). At higher temperatures,the glass strands will melt and flow out of the clay, leaving voids and resulting in a very weak panel.

Note: This process uses FIBERGLASS CLOTH ONLY - not the companion plastic resins or catalysts. Also note that Kevlar nylon and other similar fabrics cannot be used because of their low melting points.

B - Flexible (Soft) Armor

Note: See article on Kevlar soft body and vehicle armor elsewhere in this issue.

C - Transparent Armor

General Electric Co., the manufacturers of Lexan polycarbonate sheet, have developed a three point transparent armor system around this material. The products are complimented by a well designed body of information that will provide the customer with all needed instructions for cutting, finishing and installing the various Lexan and Lexgard products. To obtain this product material contact:

Laura Hanks - Publicist
General Electric Co.
100 N. Street, Pittsfield MA 01201

Request all material on Lexan Security Glazing and Lexgard armor products.

It's only fair to mention that there are other firms that produce polycarbonate sheets for security glazing. Unfortunately, none offer the variety of products or info available from G.E. In addition,most are still hung up on keeping their products "secret" for security reasons. Besides the material mentioned above,G.E.was kind enough to provide the following illustrations, most of which are from their European Installation Guide, for reprinting here. This material is not usually available in the U.S. and I appreciate their sharing it with PMA readers.

General

- LEXAN Sheet is extremely light and, therefore easy to handle.
- Handling breakages during fabrication or installation are avoided.

Fabrication

Machining

- LEXAN Sheet can be cut machined and drilled using ordinary workshop equipment such as power drills, band or circular saws and hand or power hacksaws as well as milling and polishing machines. Best results will be obtained using new tools set for working with plastics.
It is important with these operations that correct techniques are used to avoid sharp corners, notches, or irregular stress levels which can result in failure of the part.
Full details on optimum techniques are given in our publication "Working with LEXAN Sheet" available on request.

Forming

- LEXAN 9034 and MR 4004 can be installed with a curve in a frame by cold bending. Provided the minimum radius is at least 100 times the sheet thickness for 9034 and 300 times the sheet thickness for MR 4004, then the stress will have no influence on the performance of LEXAN sheet with regard to impact resistance, weatherability or its optical properties.
- Thermoforming of LEXAN 9034 and MR 4004 enables the stylists to follow vehicle lines and retain maximum possible space inside the vehicle. Standard forming techniques may be used with LEXAN 9034 including vacuum forming but MR 4004 demands very careful drape forming techniques.
For thermoforming LEXAN 9034 at temperatures over 160° C predrying of the material, and clamping to the machine are vital. Pre-heating the clamps is also strongly recommended.
Full details on optimum forming techniques are given in our publication "Working with LEXAN Sheet" available on request.

Installation

General

- Installation details will vary according to vehicle type, security required, and styling priorities of the user.
As it is impossible to cover all eventualities we state below important general principles relevant to LEXAN Sheet, and show a variety of possible installation concepts and fixtures.
It is vital for the user to test thoroughly any system under consideration to ensure it fulfills the requirements.
For further details on recommended installation techniques consult our brochure "LEXAN Sheet for Architectural Use" available on request.

Transparent Lexan sheets and Lexgard laminates have three distinct applications in armored vehicles.

1. Overglazing Existing Glass

Lexan sheet is virtually unbreakable. When mounted on the exterior of windows, it will protect the glass from impact damage during riots and other disorders.

In most cases, rocks, baseball bats and even hammers cannot penetrate the sheet. When mounted inside the vehicle, the sheet acts as a splinter shield. The sheet will contain standard safety glass splinters as well as particles from BR glass and BR acrylic windows.

Important Note! - Single Lexan sheets have little ballistic resistance and most types of firearm projectiles will penetrate them.

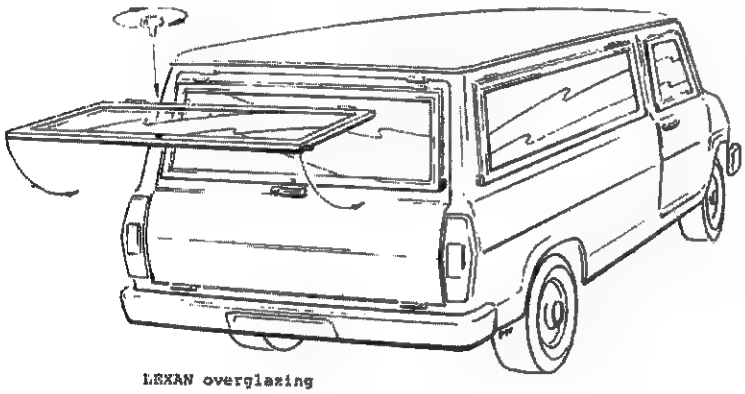

LEXAN overglazing

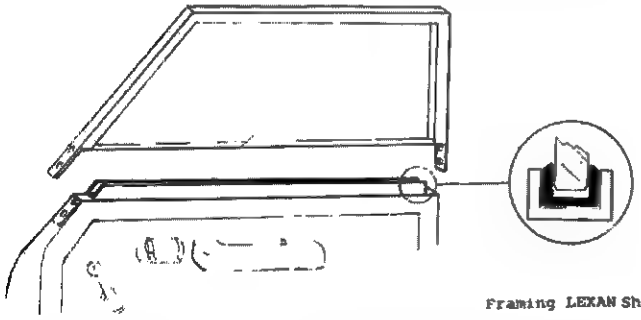

Framing LEXAN Sheet

- Bullet resistant glass plus LEXAN splinter shield. - Where restricted space demands curved glazing thus precluding the use of LEXGARD, curved bullet resistant glass can be backed up with a splinter shield protection of formed LEXAN sheet.

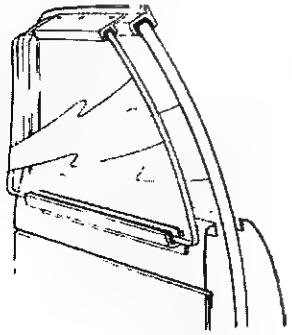

LEXAN splinter shield behind BR glass

Standard LEXAN sheet is not sold as a bullet resistant material, and should only be used as a splinter shield. The bullet resistant protection required must be satisfied solely by the selection of a proven specification of bullet resistant glass.

Screwing and bolting

- Bolting LEXAN Sheet to the existing coachwork or to a bracket is also possible.
- It is important to remember to drill slightly oversized holes in the LEXAN Sheet to allow for expansion and contraction. (for a 6 mm bolt, drill 9 mm hole).
- To further spread the load apply silicone sealant to the hole, use neoprene washers and do not tighten the nuts too firmly.

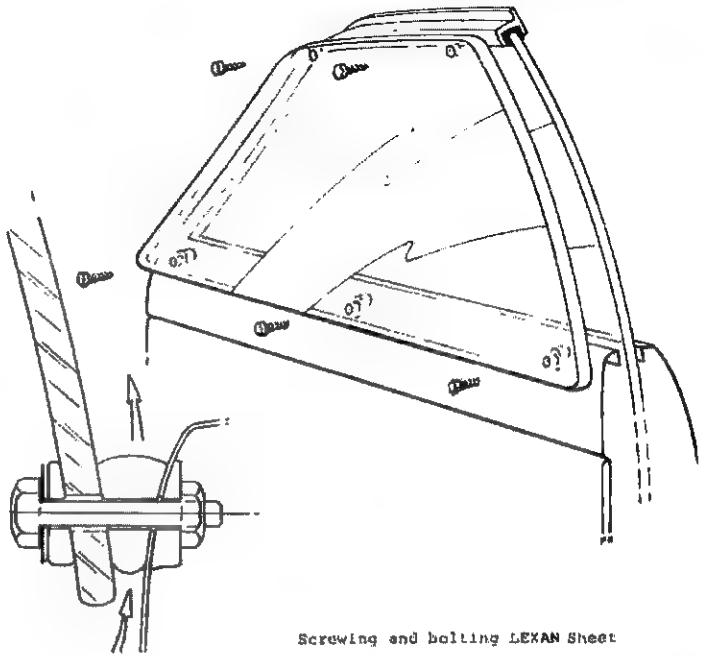

Screwing and bolting LEXAN Sheet

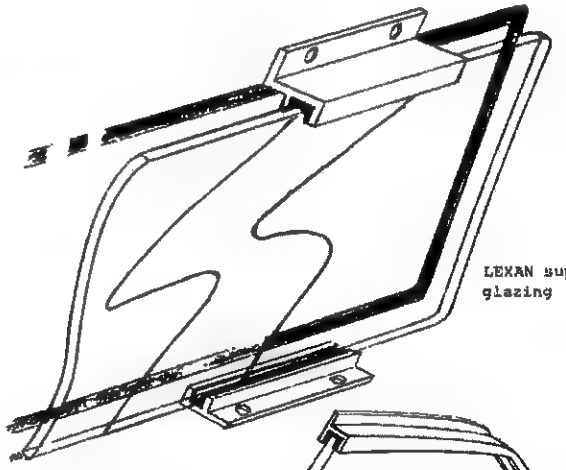

LEXAN supplementary glazing

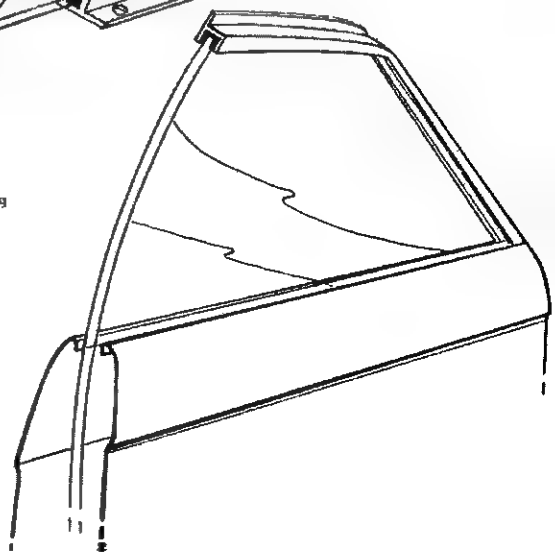

LEXAN glazing

2. Lexgard MP (Medium Power) and SP (Super Power) Laminates.

The MP material will resist penetration from most handgun rounds. The heavier SP version will even stop 44 magnum and 12 gauge shotgun slugs. These Lexgard sheets can withstand repeated hits without disintegration or excessive loss of vision. Although intended to replace the original vehicle glass, MP & SP Laminates are often installed as hinged, removable units mounted behind the existing glass material. This feature eliminates the need to remove complex curved windshields and backglass assemblies. Movable windows are usually left operational.

LEXGARD BULLET RESISTANT LAMINATE

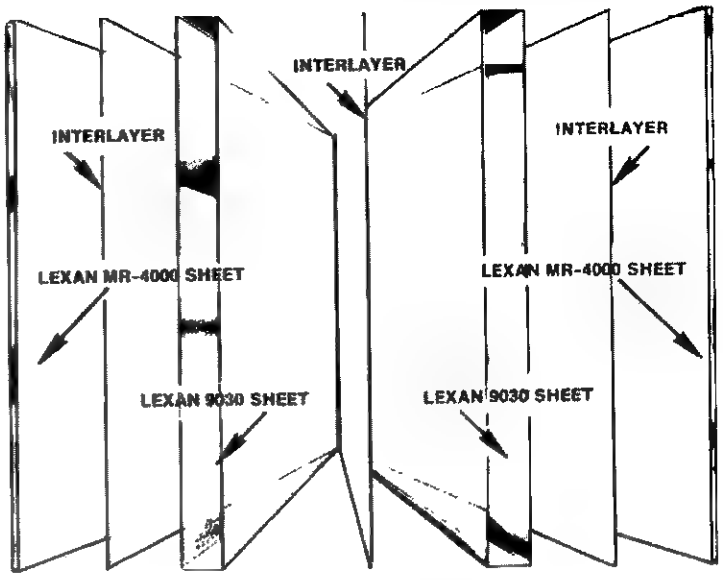

LEXGARD bullet resistant laminates are a composite of LEXAN® sheet and LEXAN MR-4000 mar-resistant sheet. These sheets are laminated together (see diagram), using a patented General Electric interlayer film.

• LEXGARD bullet-resistant shield behind glass

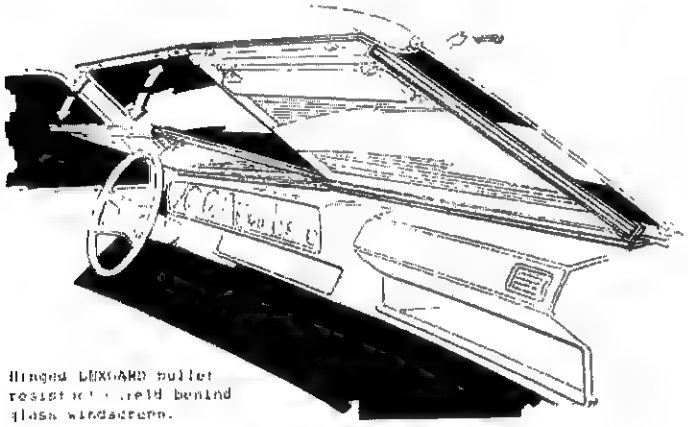

Hinged LEXGARD bullet resistant shield behind glass windscreen.

• LEXGARD plus bullet resistant glass

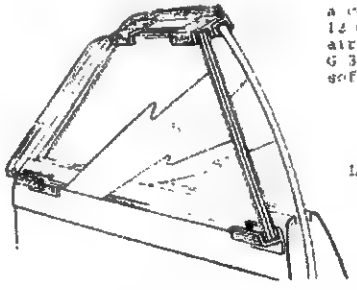

- Ballistic trials at the Beschussamt, Ulm in Germany have shown that a combination of 33 mm LEXGARD and 12 mm laminated BR glass with 5 mm air space stopped shots from Nato G 3 rifle (7.62 mm) with metal case, soft core ammunition,

LEXGARD behind BR glass

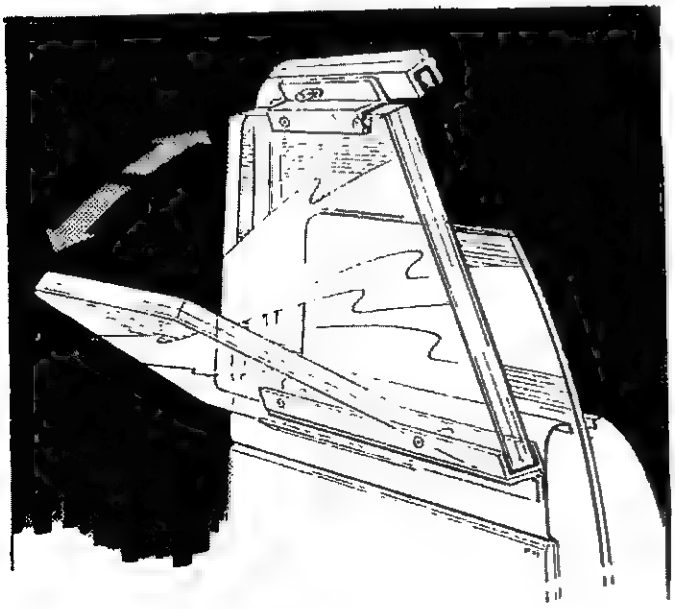

Hinged framing (interior)

• The frame concept can be developed to produce a hinged, lockable window which is removable for vehicle overhaul.

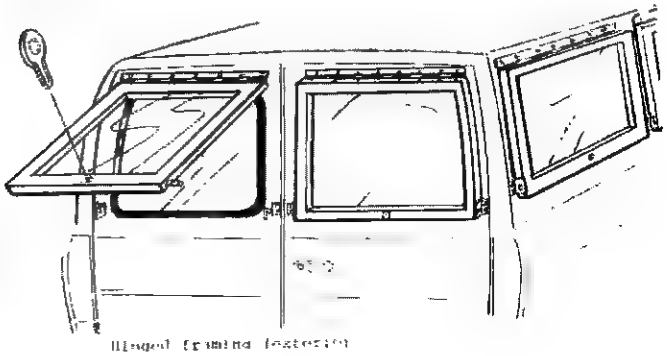

Hinged framing (exterior)

• LEXGARD panels hinged at base [illegible] at top with [illegible] release [illegible] wing nuts allow easy cleaning [illegible] to outside.

3. Lexgard Double Glazing System.

These three new laminates are designed to be double glazed w/laminated safety glass. The pieces are mounted so that a ¼" air space is maintained between the Lexgard laminate and the safety glass. Double Glazing installations involve greater weight, increased armor thickness and generally more complex procedures. The original glass is usually fixed into a permanently "closed" position or removed entirely. The mechanisms for windows, vents, etc. are removed. The Lexgard and safety glass are first mounted on an airtight frame. The airspace is filled with nitrogen to prevent fogging. The finished armor package is then installed directly into the vehicle body and is considered to be permanent, although it can be removed for repair if needed.

There are currently three grades of protection offered in the Double Glaze System. (The three digit number indicates the Lexgard panel's thickness.)

A - MPC (Medium Power Component) 375

The MPC and ¼" laminated safety glass combo will resist all handgun rounds up to and including the 38 Super Auto. This is the Lexgard/Glass combo that is used to protect the teller at the bank's drive up window. When installed, the MPC 375 package is about 7/8" thick.

B - RC (Rifle Component) 750

When installed with 3/4" laminated safety glass, the RC 750 system will stop multiple hits from the 30.06 rifle, as well as all rounds of lower power. The finished RC 750 package is 1-3/4" thick.

C - GC (Government Component) 938

The specialized four-ply Lexgard panel, when combined with 3/4" laminated safety glass, will defeat repeated hits from the .308 NATO round. The completed GC 938 installation is just under 2" in thickness.

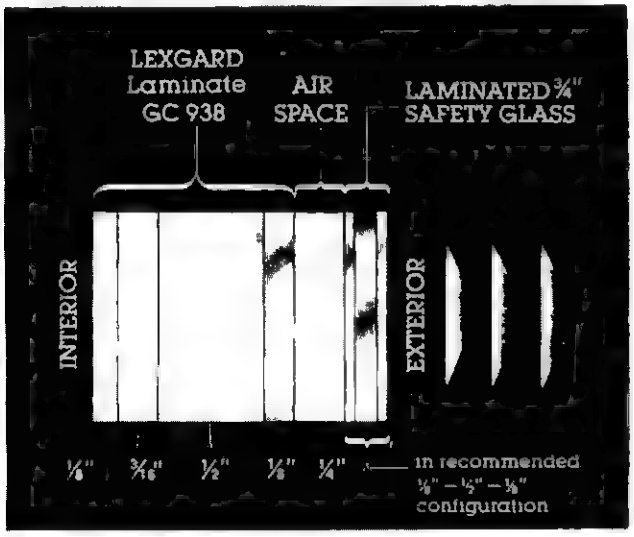

Thinner Profile, Lighter Weight

The new double-glazed system provides increased protection at a lighter weight when compared to competitive products.

Performance vs. weight

Protection Level	LEXGARD Laminates*	Bullet Resistant Acrylic	Bullet Resistant Glass
Medium Power	6 3 lbs	7 7 lbs	14 9 lbs
Rifle Power	14.6 lbs.	—	26 lbs
NATO Power	15 5 lbs	—	39.5 lbs

*New LEXGARD Laminate Component Systems including corresponding ¼" or ¾" laminated glass and air space

Safety Glass

The ¼" laminated safety glass used w/ MPC Laminate (item A) is made from two pieces of 1/8" glass sheet. This material is standard auto glass and is available from any glass shop.

The 3/4" laminated safety glass called for in the RC 750 (item B) and GC 938 (item C) sections must be special ordered. Your local glass shop can probably get it, as well as cut and sand it for you. When ordering, be sure to specify 3/4" Laminated Safety Glass. The three layers (most glass has two) MUST be in the 1/8"—1/2"—1/8" configuration for the system to function correctly.

ARMBRUST

antitank-weapon

by Clyde Barrow

I - INTRODUCTION

The MBB ARMBRUST is truly unique among current AT (Anti Tank) weapons. The name ARMBRUST (German for crossbow)alludes to William Tell's famous weapon. Like its namesake, the ARMBRUST is a portable armor piercing weapon,designed to be both quiet and deadly. Developed in the early seventies by the German arms firm of Messerschmitt-Brokow-Blohm,the weapon is currently produced by the Boeing Company for U.S. distribution. The US Army was reportedly considering the ARMBRUST for use in urban combat,and it now appears that they will be buying the units produced by Boeing.

Like many modern AT weapons, the ARMBRUST is a singleshot-disposable affair which can be easily carried and fired by one man.Firing procedure is similar to using a rifle, which means, the weapon can be operated without extensive training.

The ARMBRUST design incorporates a number of unique features.

1. Firing noise is low, about the same as a pistol. This is by no means silent, but it's a great improvement over the thunderous roar of conventional AT weapons.

2. Virtually all smoke and flash is retained within the launcher.The small amount that does escape through the hole in the front piston, is diffused by the flash suppressor.The suppressor also serves as a protective cover for the nose of the projectile.

3. Very little IR (Infra Red)radiation is emitted upon firing.This protects the firer's position from being discovered at night by an observer using an IR viewer. (See "Night Vision Devices"in PMA Vol.2#2, page 48).

4. The countermass of plastic flakes readily disperses without ricocheting, allowing the ARMBRUST to be safely fired within two feet of solid wall.Most AT weapons produce a backblast which requires 20-30 feet of safe space at the rear.

5. Lack of recoil allows the use of all types of rifle sights including the delicate IR or Starlite type scopes.In the PMA version, the sight is removed from the fired weapon and reused. In the factory ARMBRUST, the sight is discarded along with the spent tube.

6. Finally, the ARMBRUST is considered to be extremely accurate, due to the solid two handed hold, the lack of recoil, and a projectile which has a very flat trajectory out to the optimum range of 300 yards.

Fig.1

2. CONSTRUCTION MATERIAL AND DIMENSIONS

Specific details on materials and dimensions for the factory ARMBRUST are not available. The materials chosen here seemed the most practical for home building. Substitute materials can be used to best suit your needs.The specs given are estimates only, but should be close to those of the original design. Again these can be altered to suit your individual requirements. For the sake of simplicity, the original piezio electric initiator has been replaced with the option of using a simpler percussion or electric initiator unit. For the same reason, the flip-out disposable reflex sight has been replaced with a conventional rifle scope mount.This allows quick installation and removal of a variety of conventional scopes.

3. PROPELLANT

When making up the propellant (launching) charge, you will have to experiment to determine the optimum weight of material for both maximum accuracy and safe operating pressures. The bore sighting bench shown in figure 2 may also be used as the test fixture for holding experimentally loaded tubes.

All testing should be done with inert practice rounds only. All firing should be done remotely from a safe distance.

4. REUSE OF ONCE-FIRED TUBES

The ARMBRUST is intended to be fired once and then discarded. Multiple firings may result in a burst launch tube.A safe reloadable version of the ARMBRUST could conceivably be produced by increasing the tube's wall thickness and beefing up the brake rings. This would of course add to the final weight, and might result in a weapon too heavy for one to carry and fire.

EXOTIC WEAPONS: AN ACCESS BOOK *by Michael Hoy*

NOW AVAILABLE: The all-new, bigger and better than ever edition of EXOTIC WEAPONS: AN ACCESS BOOK, the ONLY book that tells YOU where and how to buy or make all sorts of exotic weapons. Here are just a FEW of the weapons in this amazing new book: *switchblades, stun guns, bolas, medieval weapons, shockers, blackjacks, boomerangs, whips, tranquilizer guns, hand catapults, blitzlights, tasers, gas masks, primitive weapons, olfactory weapons, sonic weapons, brass knuckles, sword canes, slurp guns, oriental weapons, crossbows, gatling guns, night vision devices, machine guns, body armor, silencers, and much more!*

- More than 90 different weapons described and illustrated, with dealer listings for each weapon!
- Sources for not only the actual weapons themselves, but also for books, periodicals, plans, organizations, and other information on personal weaponry!
- More than 120 photographs and numerous drawings!
- A section on improvised and miscellaneous weapons!
- Complete names and addresses of more than 300 dealers!

EXOTIC WEAPONS: AN ACCESS BOOK is over 90 large 8½ x 11 pages, crammed with information on where and how YOU can buy more than 90 different weapons! More than 120 photographs, and names and addresses of over 300 dealers in a well-organized and easy-to-use format make EXOTIC WEAPONS: AN ACCESS BOOK the most complete weapons shopping guide ever written! ORDER YOUR COPY TODAY!

For your copy of EXOTIC WEAPONS: AN ACCESS BOOK, send $6.95 + $1.00 shipping to: Loompanics Unlimited, Box 264, Mason, MI 48864.

5. PROJECTILE

The factory weapon is supplied with one of three types of projectiles.The first,a signal flare, is not covered in this article. The remaining two, anti-personnel (fragmenting) and HEAT (High Explosive Anti Tank) can both be constructed by modifying M-31 Practice Rifle Grenades.

These M-31 inert rounds are readily converted into live ordnance, but are totally legal to possess in their unarmed state. M-31 inert grenades are available from several sources.(See list at end of article or scan through a current copy of Shotgun News for suppliers.) Prices range from $4 to $8 each with lower prices available on bulk sales.

Figure 2 Bore Sighting & Test Firing Bench

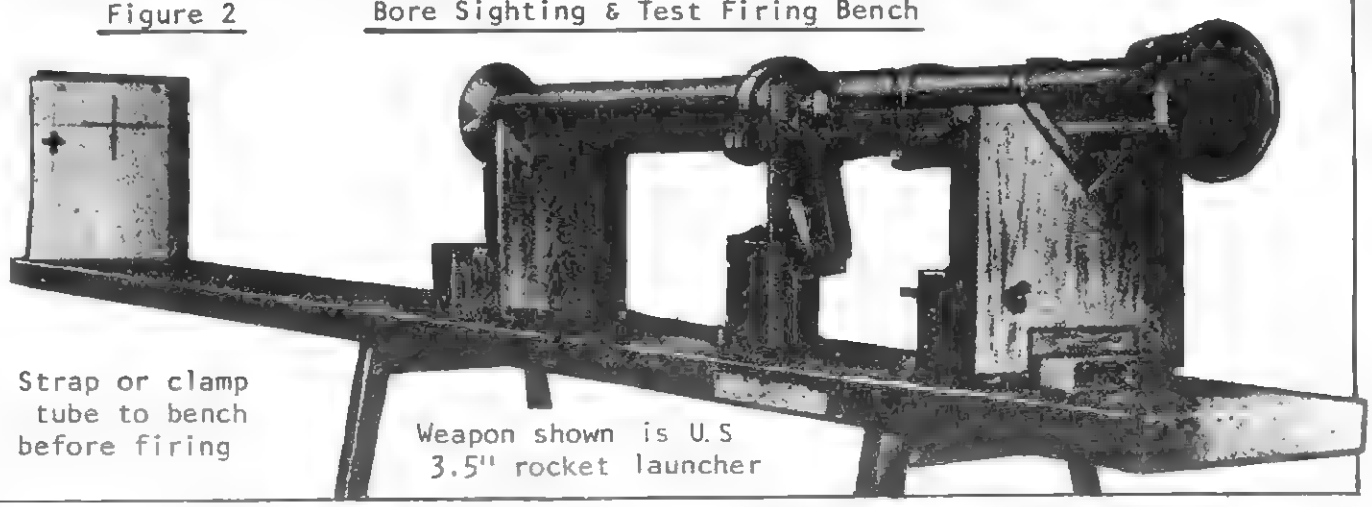

II - GENERAL DESCRIPTION / NOTES

The ARMBRUST tube assembly is comprised of the launch tube, the projectile, countermass, launching charge, two pistons and two brake rings. Attached to the underside of the launch tube, is the grip assembly. This consists of the frame, grip, rear handle, shoulder rest, trigger, safety, sling, and sight assembly. Sandwiched between tube and grip assemblies are the initiator and detonator. These may be either electric or percussion fired, depending upon builder's preference.

1. Functioning

When the weapon is fired, the trigger activates the initiator. This fires the detonator, which in turn fires the main launching charge. The pressure created by the burning gases causes the notched section of the screw joining the pistons to break. When the joint is broken, the two pistons are blown to the ends of the tube, coming to rest against the brake rings. The projectile and countermass packages continue out the ends of the tube.

The projectile follows a very flat path to the target, while the countermass package disperses. The plastic flakes fall to the ground about 30 feet behind the launcher.

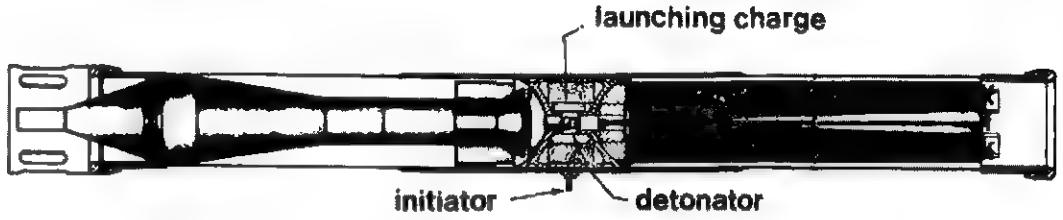

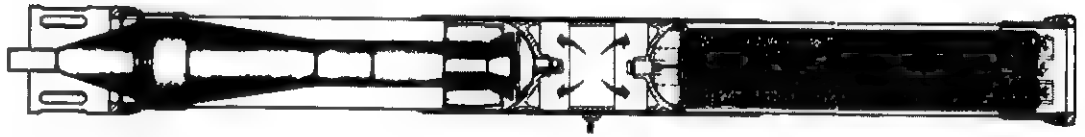

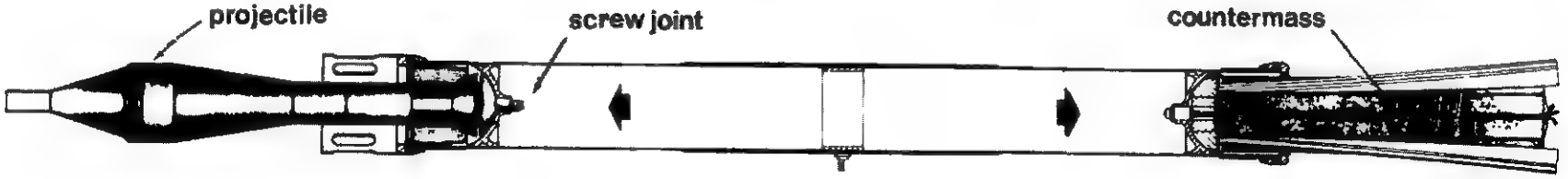

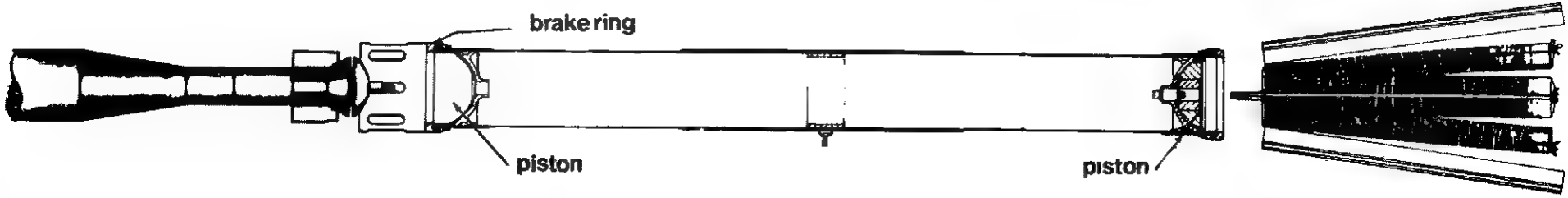

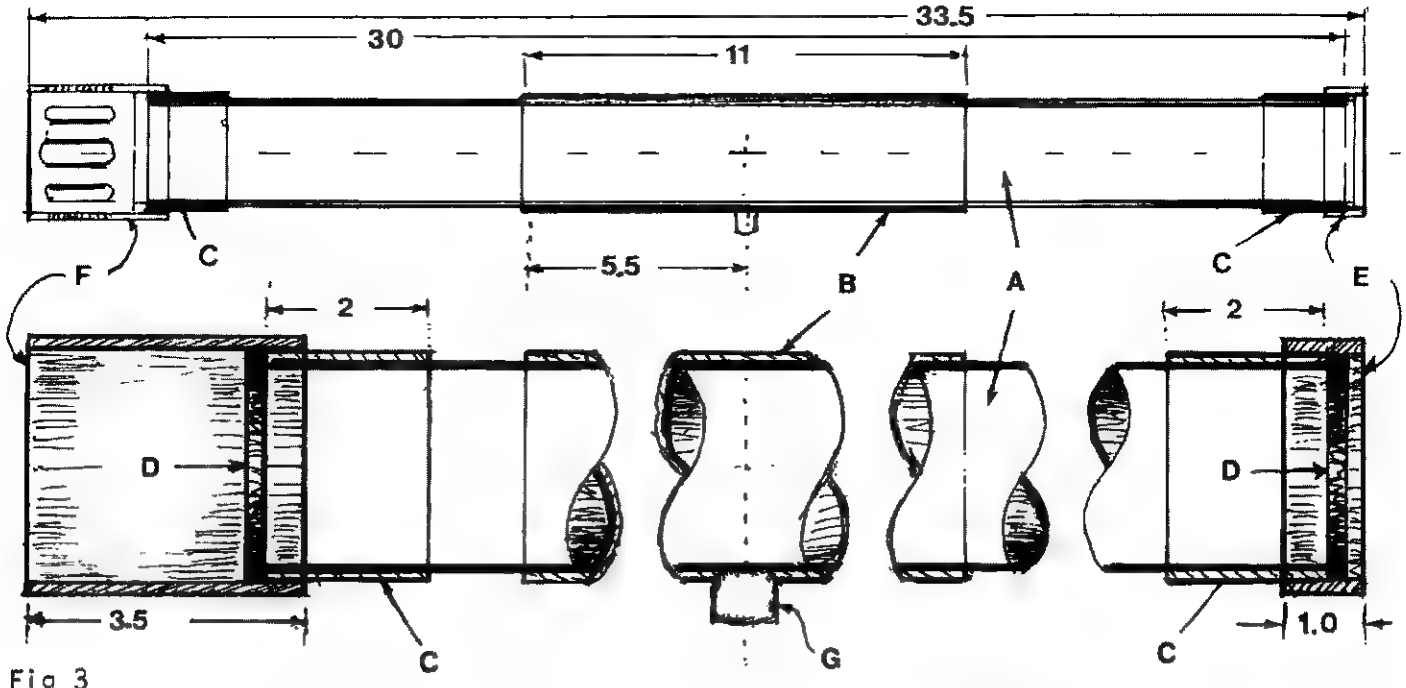

Fig 3 Section One - Launch Tube Assembly

INDIVIDUAL PARTS SPECS:

A. Launch Tube: 2.745"±.005 ID / 2.87" OD (.060 wall)x 30" long.

B. Outer Tube-Center: 2.875" ID / 2.995" OD (.060 wall)x 11" long.

C. Outer Tube Ends (2): Same ID/OD as B. Length is 2" each.

D. Brake Rings (2): 2.6875" ID / 2.995" OD x .25" long each.

E. Brake Ring Collar-Rear: 3" ID / 3.24 OD (.120 wall) x 1" long.

F. Brake Ring Collar-Front(flashhider): Same ID/OD as E. Length is 3.5". 8 slots, .375" wide x 1.5" long may be cut (optional). Locate slots at 45° intervals. Hole centers are .6875" and 1.8125" from front edge of tube.

G. Initiator Housing: Pipe Nipple, 1.2" long x .7" diameter. Trim to .5" long. Radius cut end to fit 3" OD outer tube.

III - CONSTRUCTION PROCEDURE

The ARMBRUST construction info has been divided into three parts; the launch tube, the grip assembly, and the last part covering the interior components, the projectile, countermass and propellant.

Each of these three component sections may be produced separately to be assembled just prior to firing.

Section One - Launch Tube Assembly

Refer to the diagram marked Section One

Unless otherwise specified, all of the individual pieces are cut from mild steel seamless tubing. More exotic and costly alloy tubing may be also used. In fact,the original is most likely heat treated aluminum alloy tubing. This would require heliarc welding, roll crimping,press fitting etc. To simplify, I chose the cheapest and easiest to work with of the steels. Assemble all pieces with good silver solder or a low temperature brazing rod.This will not only prevent warping, but will allow all pieces to be removed and reused if desired. None of the tube lengths specified are critical, as each piece in the design overlaps another. The only critical dimension is the ID (inside diameter) of the 30" launch tube. If the M-31 grenade body is to be used,the minimum tube ID should be held at 2.745^{+} .005.

Note: If the tubing obtained for pieces B,C,D,E and F are not quite the right size, cut them lengthwise along one side. Increase or decrease tubing to the correct ID and repair split.

Before beginning assembly, deburr and degrease all pieces. Tight fitting pieces may be expanded slightly for installation by heating them with a torch.

1. Slide tube B over tube A and center it 9.5" from either end of A. Spot braze in place.

2. Install the two end tubes C flush with the ends of tube A. Spot braze in place. Place a mark .5" from the outer ends of both pieces C.

3. Slide pieces E and F .5" onto the ends of tubes C, aligning them with the marks made in step 2. Clamp or tape E and F firmly in place, DO NOT BRAZE!

4. Insert brake rings D into the ends of E and F. Tap the rings into position flush against the ends of tube A-C. Braze rings D to pieces E and F. When cool, remove assemblies D-E and D-F from the ends of the main tube.These pieces will be re-installed after the launcher is loaded.

5. Mark completed tube assembly in the center (15" from either end) and drill a .5" diameter hole through wall of tube assembly. Deburr hole and braze housing G in place over hole.

Section Two - Grip Frame Assembly

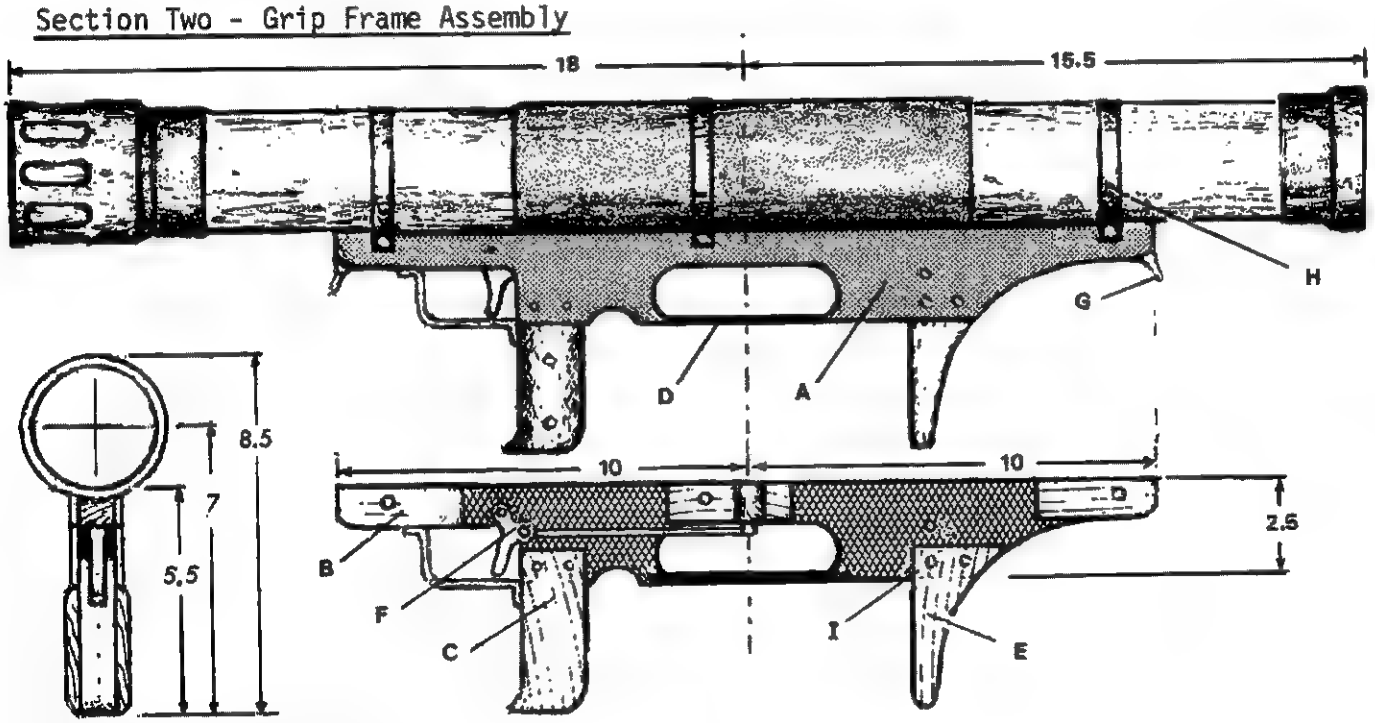

INDIVIDUAL PARTS SPECS

A - Side Pieces (2): 1/8" masonite, 20" long x 2.5" high.

B - Spacer Blocks (3): 1" x 1" x 3" pine, fir or similar wood.

C - Front Grip: 1" x 1.5" x 4" wood (same as B). Curved grip panels; optional.

D - Rear Grip Liner: 1" wide x .25" thick x 5" long wood, metal or masonite strip.

E - Shoulder Rest: 1" x 2.5" x 4" wood (same as B).

F - Trigger & Safety: Builder designed.

G - Sling Swivels (2): Wood screw type rifle swivels.

H - Retainers (3): Flexible steel strap, .5" x 10" each

I - Shoulder Rest Hinge: Optional.

1. Cut out side pieces, using specs given in Fig.5. Drill the three .25" diameter holes where indicated.

2. Cut out the three spacer blocks and drill the three .25" diameter holes as indicated in Fig.5. The center block must also be drilled with a .75" hole to accomodate the initiator housing. Radius the top sides of the blocks to conform to the outside curve of the launch tube assembly.

3. Apply epoxy glue to the sides of the three blocks. Assemble blocks and side pieces A, securing them with three .25" x 1½" bolts. Bolts and nuts should be waxed to allow removal after the epoxy has cured.

4. Epoxy pieces D and E between side pieces A. Clamp these pieces in place until the glue has cured. E may be reinforced with mounting screws if desired.

5. Because the type of initiator/detonator is left up to the builder,you will also have to choose the appropriate type of trigger and safety. Once these are installed, the front grip may be epoxied or screwed in place between the side pieces A.It may be necessary to drill linkage holes through the grip,so screw placement should be decided after this has been done.

6. Install wood screw type sling swivels at front and rear of completed grip frame.

7. A trigger guard (optional)may be made by bending a .5" wide aluminum strip to shape. Secure it to the bottom of the front spacer block and front of the grip.

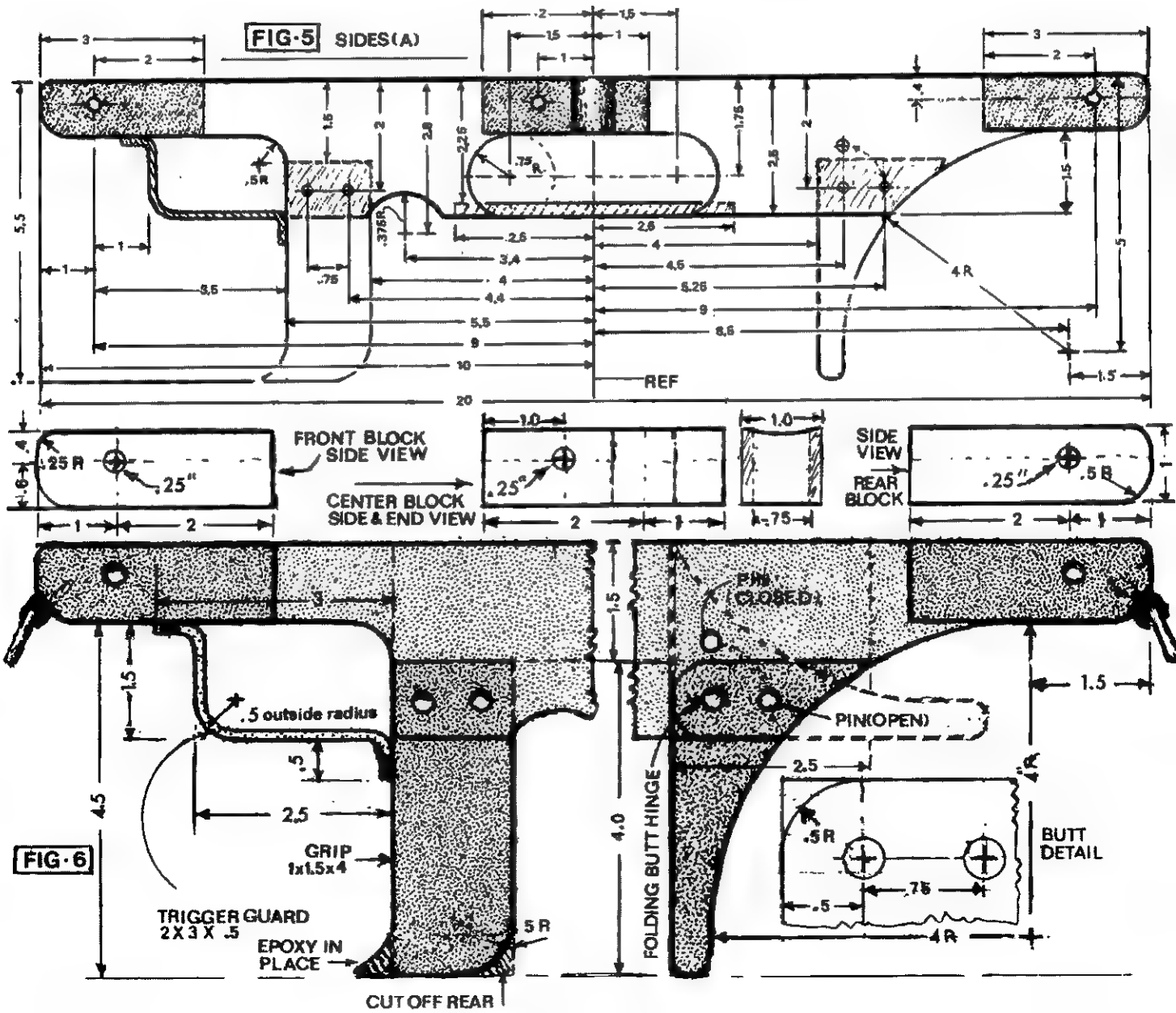

Section Three - Internal Components

A. M-31 Grenade Modification

If the HEAT (shaped charge) version is to be built, disregard step 5 and go on to step 6.

FIG-7

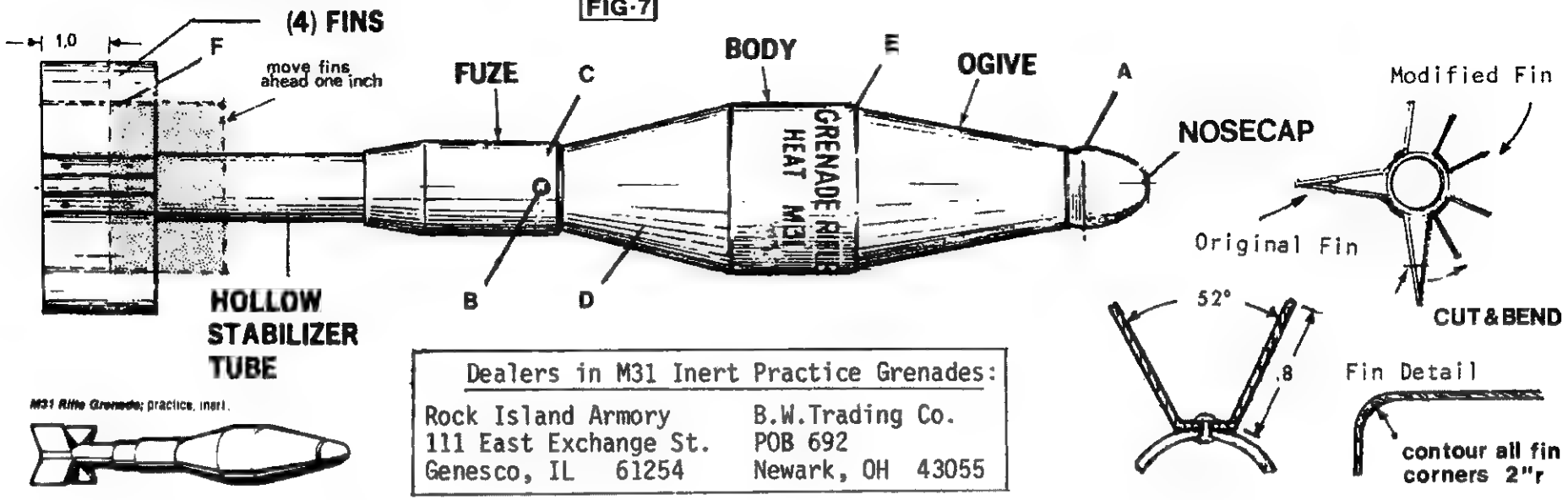

Dealers in M31 Inert Practice Grenades:

Rock Island Armory 111 East Exchange St. Genesco, IL 61254	B.W.Trading Co. POB 692 Newark, OH 43055

1. Remove the inert M-31 Grenade from its shipping tube. Save the container for storing the completed round.
2. File or saw through the crimp along line A and remove the nose cap. Some inert M-31's on the market contain a complete piezo-electric initiator, although the majority do not. If the piezo unit will be used, retain the nose cap and epoxy it back in place AFTER the initiator has been checked and wired into an electric detonator. If a conventional, inertia type initiator is to be used, remove all plastic and rubber parts from the nose. Braze a sheetmetal patch over the hole and reinstall the nose cap with solder or epoxy.
3. Drill out the two punch marks at B. The body and fuze sections may now be separated by melting the soldered joint at C and pulling the sections apart.
4. Remove the inert plastic filler from the body section by heating area D with a propane torch. Continue until all of the plastic melts and runs out of the bottom. An old pie plate can be used as a catch pan.
5. Melt the soldered joint at E and separate the body and ogive sections. Continue to heat the body until the copper cone can be gently driven out with a wooden dowel.

   The copper cone is not used for the Anti-Personnel (fragmenting) round.

   Line the inside of the body and ogive with pre-fragmented shrapnel material.

6. The body and ogive are now reassembled and soldered together. Seal the inside of this assembly with a heavy coat of red oxide lacquer primer. This prevents possible reactions between the explosive and the metal surface of the grenade. When dry, fill the body/ogive section with the explosive filler of your choice. Complete how-to info for several different examples of both load types have been detailed in PMA Volume One and Volume Two issue #2.

All examples of the same type of round should be nearly identical in weight and balance to maintain accuracy.

7. Drill fuze body for safety pin (inertia type only) and install either an electric or inertia type detonator in the fuze body. Secure in place with shims, spacer blocks, epoxy etc. Install safety pin and retainer if one is to be used. Reassemble the fuze and body sections with both epoxy and a pair of screws or pop rivets (holes B). Maintain proper alignment during reassembly to avoid a wobbly, inaccurate projectile.

9. Construct the tailcone, disc, and plug components as outlined in Fig.10 . Remove the four rear fin screws and slide the above pieces into position. Drill four screw holes through the tail tube into the plug assembly and reinstall the four rear screws. To insure a strong joint, the plug should be coated with epoxy before insertion into the tube.

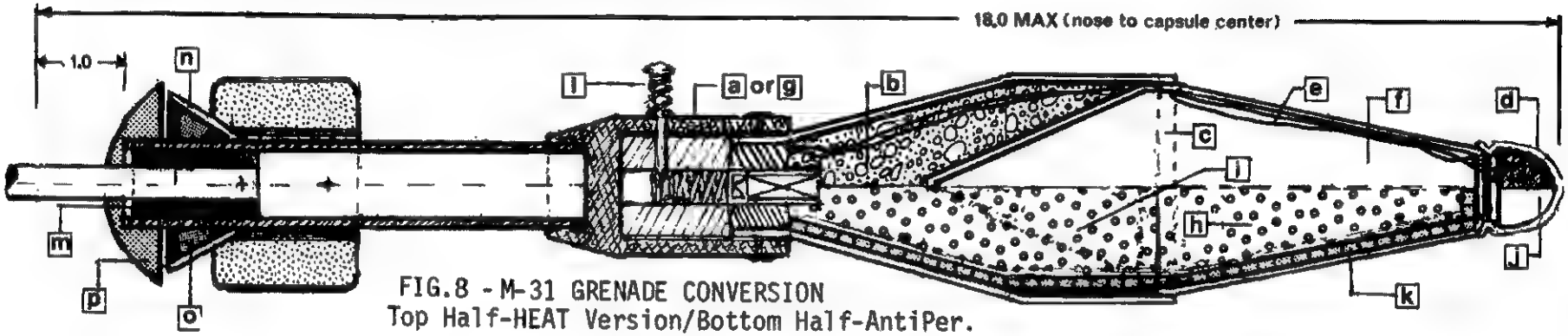

FIG.8 - M-31 GRENADE CONVERSION
Top Half-HEAT Version/Bottom Half-AntiPer.

a - electric fuze
b - explosive filler
c - copper cone
d - piezio elec. initiator
e - fuze wires
f - empty space
g - inertia fuze
h - flash powder
i - cone removed
j - empty space
k - pre-frangmented liner
l - bore safety

FIG. 9 - INERTIA FUZE
(See PMA Vol. 1 - pg. 21)

FIG. 10 - TAIL COMPONENTS

M - tail plug
N - tail cone
O - disc
P - rubber seal

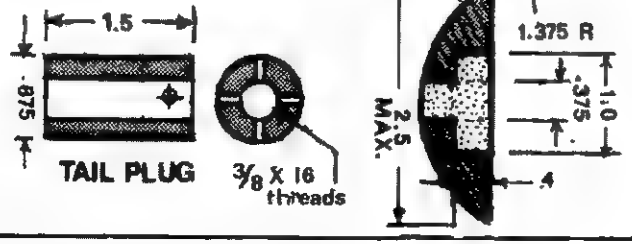

8. Drill or punch out the eight small fin rivets. Move fin assembly forward one inch and mark/drill new front holes in the tail tube. Remove the fin assembly and use tin snips to cut the fins along line F. Spread and space each fin as shown. Carefully trim each fin to the correct dimensions and reinstall on tail tube. Use small screws instead of rivets, as they will be removed and replaced later on. (see pp 142)

10. The M-31 round is now loaded and ready for use. It may be loaded into the launcher (see Section Four - Final Assembly) or stored in its tube until needed.

Note: All live rounds, as well as their containers, should be clearly stenciled: LIVE/HEAT or LIVE/AntiPersonnel.

B - PROPELLANT PACKAGE

I. - General

The propellant package (explosive capsule) is made up of the following pieces:

a-Outer Casing	e-Detonator Liner
b-Front Piston	f-Propellant Filler
c-Rear Piston	g-Locater Tube
d-Detonator	h-Screw Joint

When assembled, the package should be 3.6" to 3.625" long. To prevent assembly difficulties and possible piston jamming, the OD of the finished package must not exceed 2.74" OD.

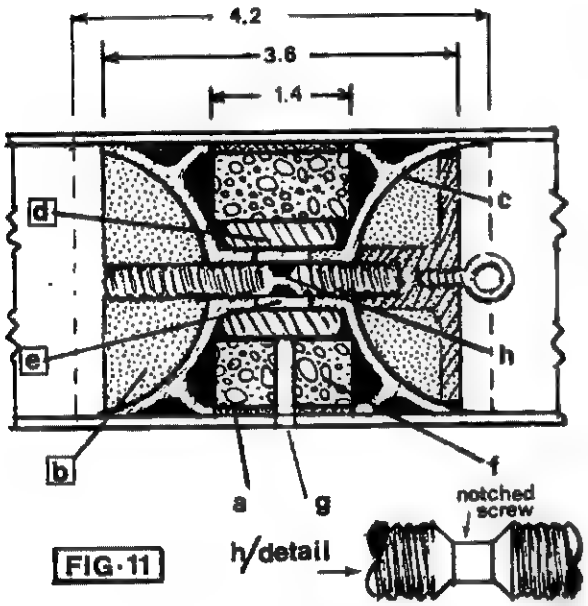

FIG·11

The liner is made from a section of seamless steel tubing. It functions as a shield for the screw joint and also helps to direct the force of the detonator toward the propellant filler.

f - Propellant Filler:

Specific propellant type and amount are left up to the builder. Three possibilities are;

1. Model Rocket Motors
Soak in water and peel off/discard the nozzle and cardboard body tube. Cut sticks to shape and glue into the outer casing.

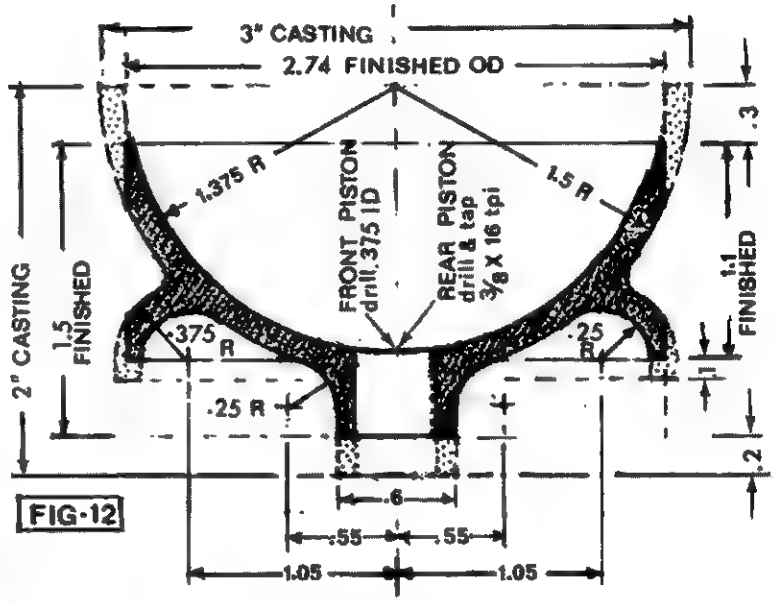

FIG·12

II. - Individual Parts Specs

a - Outer Casing: 2.74" OD/ 2.62" ID x 1.4" long.

Material may be steel tubing, but seamless aluminum is preferred.

b - Front Piston; c - Rear Piston ;

Single sets of pistons can be easily turned on the lathe from a solid piece of 3" OD aluminum round stock. Large batches are best produced as oversized aluminum sand castings which require a minimum of machining for completion. Figure 12 has specs for both cast blanks and the completed piston.

d - Detonator: 1.20" OD/.65" ID x 1.2" long.

Actual material is the builder's choice. Ideally, a castable explosive will be molded around the steel liner (e).

e - Detonator Liner: .625" OD x .6" long.

2. Black Powder
Try several of the slower burning (larger grained) grades. Powder may be sealed into 'Baggies' before loading.

3. Improvised White or Red Powder Propellant (See PMA Vol.1,pg.131)

Maximum propellant length is 1.25"

g - Locater Tube: .5" OD/.65" wall

Tube may be cut from either steel or aluminum commercial tubing.

h - Screw Joint:

The type of material used for the factory screw is unknown. We've chosen 3/8" x 16 threaded brass rod. Note that the center section is prenotched to break under pressure. The correct diameter of the notched area will have to be determined by testing. The screw should hold the pistons together until the propellant is fully ignited, yet it MUST break before excess pressure ruptures the casing.

III-Assembly of Propellant Package

1. Apply epoxy to the inner faces of both pistons and to the edges of the outer casing.

2. Screw the threaded rod into position in the rear piston.

3. Slide outer casing and detonator assemblies over the rod and into position against the rear piston.

4. Install the front piston over the threaded rod and position it flush against the edge of the outer casing.There are no threads in the front piston,so a temporary clamp is set up with a 3/8" nut and a large flat washer.

5. Use a scrap piece of launch tube as an alignment jig. Insert the propellant package in the tube and tighten temporary clamp nut on front piston.

6. When the adhesive has cured,remove the finished assembly from the jig.Loosen and remove the clamp nut and washer.

C - COUNTERMASS ASSEMBLY

The countermass assembly consists of the following pieces:

a - Plastic Flakes

Approximately 5,000 flakes are cut from .014" thick plastic between .6" and .65" square. Flakes are bundled and tied into three double stacks (total of six) roughly 11.5" long.Each stack contains about 830 flakes.

Fig.13

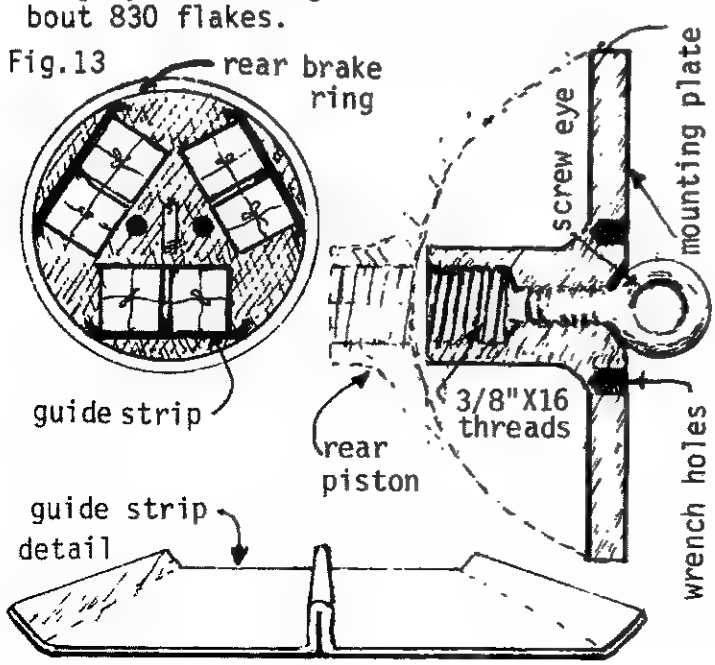

b - Guide Strips (3)

Three guide strips separate the double stacks of flakes and help to guide them over the brake ring. Each strip is 12" long X 2.0" wide. Material is cardboard or plastic sheet. Fold each strip down the center line to form a "W" shape as shown.

c - Mounting Plate

Cast aluminum, see Fig.13 for specs. This piece threads onto the rear of the screw joint, and rests against the curved inner wall of the rear piston. An "eye" is provided for tying the bundles of plastic flakes into place. Two wrench holes are drilled for installing the completed countermass assembly into the launch tube.

Note: Because the Mounting Plate remains within the launch tube upon firing, it should not be included when calculating the total weight of the countermass assy..

Section Four - Final Assembly

1. Slide the propellant package into the center of the launch tube. Align the .5" diameter hole with the initiator housing. Lock these two assemblies together by inserting the locater tube into housing.

2. Slip the front and rear brake ring/collar assemblies onto the launch tube ends. Tap into final position with a wooden block if necessary. Protect the central tube area with a damp towel before welding the front and rear collars into place.

3. Run a bead of silicone adhesive along the tops of the grip frame's spacer blocks and side panels. Place the launch tube onto the grip frame and press together to spread the adhesive. Install the three retaining straps and tighten them into position.

4. Paint the completed tube/frame assembly with olive drab lacquer.

5. Insert the projectile and countermass assemblies into their respective ends of the launcher. Carefully feed them over the brake rings and into the tube until they rest against the protruding ends of the screw joint. Thread both projectile and countermass onto the screw and continue to tighten until both are a snug fit against the outer faces of the pistons.

RUGER MINI 14 folding stock and vented handguard

*MINI-14 IS A REGISTERED TRADE-MARK OF STURM, RUGER & CO

by Clyde Barrow

A - Introduction

Most readers are familiar with Bill Ruger's Mini 14 Carbine, as the rifle has been featured in every gun magazine in the country. The rifle's popularity is well deserved. It's well made, reasonably priced and fun to shoot. The Mini 14 was initially marketed as a police/border patrol carbine. Popular demand soon resulted in sales to the general public as a sportster/plinker. When modified as outlined here,this is an excellent light paramilitary weapon.

Contrary to popular opinion,the Mini 14 is not a military battle rifle, nor can it be readily converted into one. In all fairness to the Ruger firm, the rifle was never intended or promoted for heavy combat use.

B - Factory Folding Stock - Handguard

The factory recognized the need for an optional pistol grip/folding stock as well as a vented handguard for improved barrel cooling.(see figure 1) The latter is currently available to civilians as a factory accessory, but the folding stock assembly is restricted to police/military sales only. There are rumors that this unit may be offered to the public in a year or two, but don't hold your breath. Although once available for the original series 180 rifles, these optional stocks are now available for the current 181 series only.Qualified buyers (tax exempt agencies) may order through their police equipment supplier or directly from the factory. (Fig.1)

Fig One — Ruger Law-Enforcement Accessories

*Available for shipment to excise tax exempt agencies only

Catalog No.	Description	Suggested List Price (Incl. Federal Excise Tax)
*MA-K	Folding Stock for AC-556 (not available for 190 — series), each	99.50
*MSK	Folding Stock for Mini-14 (not available for 180 — series), each	99.50
MFH	Fiberglass Handguard for Mini-14, AC-556, AC-556K, each	10.00
MFSS	Flash hider (Fits Mini-14/20GB, AC-556, AC-556K Only), each	8.00

C - Commercial Folding Stocks

There are over half a dozen brands of Mini 14 folding stocks available on the civilian market. None of these are Ruger products.The three following examples are the only ones of the lot worthy of your consideration. The remainder run the gamut from impractical to just plain junk.

1. The first example is available from Federal Ordnance. The stock hinge mechanism is copied from the German MP-40 Submachine gun.

The new Mini 14 stock resembles the old Fed Ord M1 Carbine and Ruger 10-22 stocks that have been around for years.Those who have encountered these earlier units will recall that the buttplate tends to fold up when firing. This problem has now been eliminated with the addition of a third stock "leg" on the lower left side. This piece holds the butt firmly in position when open, and folds away with the rest of the stock when closed. If you own one of the earlier "2 legged" stocks,you might consider modifying it as outlined above.

The Fed Ord Mini 14 Stock is supplied ready to install,although minor inletting and/or bedding may be required. (See Fig.2)

2. R & R Enterprises markets a number of accessories for the Mini 14. Until recently, they were producing and selling a copy of the Ruger factory stock. Apparently they have discontinued these as they are currently offering a ready-to-install folding assembly which closely resembles the design found on the FN-FAL Assault Rifle.I haven't had a chance to examine one of these new stocks,although I've received favorable reports about other R & R products in the past. (See Figure 3 for further details)

3. Choate Machine and Tool Co. offers a conversion unit that is attached to the customer's stock at the Choate facility. (see figure 4) The same unit can be installed on both 180 or 181 series Mini 14's. I've examined and used samples of both models, and although there are a few points I'd change (see section on individual components), the unit as supplied is functional, cleverly designed and certainly worth the money. Choate also offers a vented handguard of his won design.He welcomes custom work and will modify his standard stock to suit individual requirements.

Fig. Two

Federal Ordnance, Inc.
1443 Potrero Avenue
South El Monte, CA 91733

Fig. Three

R & R ENTERPRISES —P.O. BOX 385
JEFFERSON, S.D. 57038 — (605) 966-5382

Our stock body is made from a fiberglass reinforced structural nylon with a black, non-reflective surface similar in texture to the H & K. The pistol grip is molded as an integral part of the stock forming a strong, one piece unit. Resistance to impact, chemicals and temperature extremes surpasses the most demanding military and civilian standards. The steel folding unit (with nylon butt pad) duplicates the appearance and strength of the FN-FAL stock.

Fig. Four

$68.00 +U.P.S. & Ins., installed on your stock, send stock only.

Choate Machine & Tool Co.
Box 218 — Phone 501-724-3138
Bald Knob, Arkansas 72010

D - Stock Construction

The following construction info is based on Choate's design. The material is broken down into sections covering the three major components.

1. Housing-Gripmount Assembly (Figure 5)

This is an exact copy of the original, which is well designed and works flawlessly. All pieces are steel,assembled and finished with standard cutting,welding and grinding techniques.The original body is made from commercial rectangular steel tubing, but could just as easily be made up from flat steel sheet.

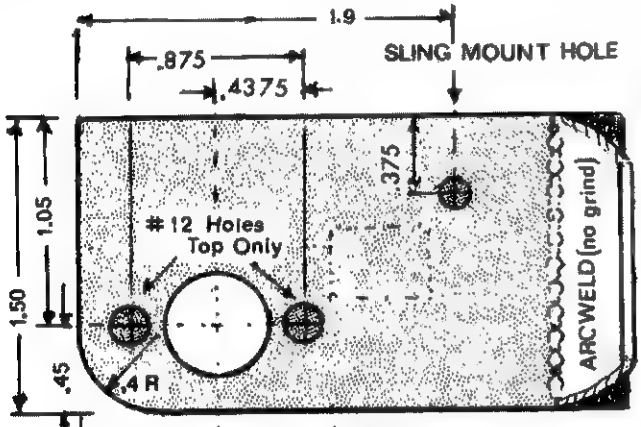

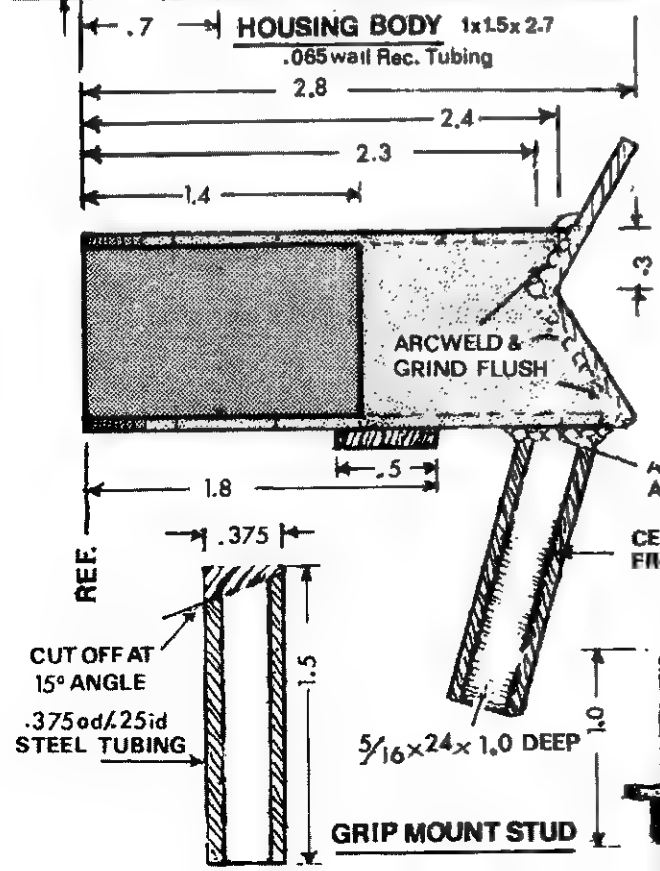

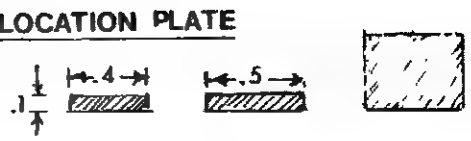

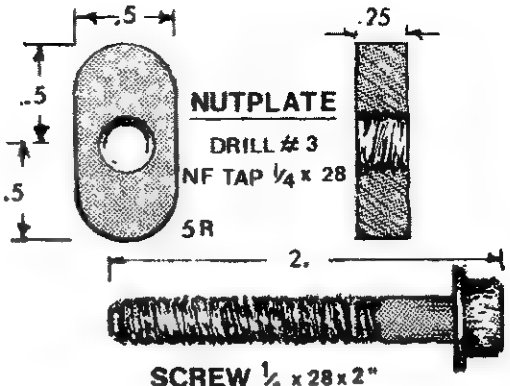

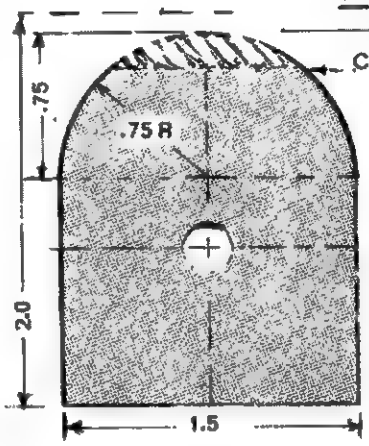

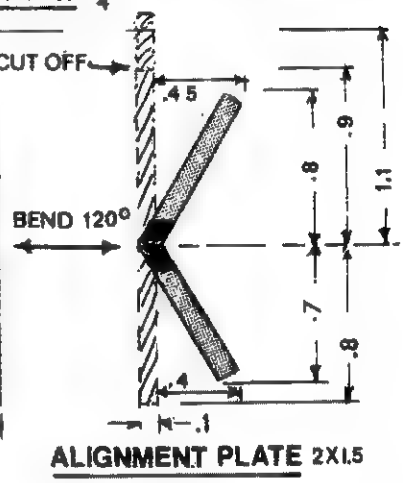

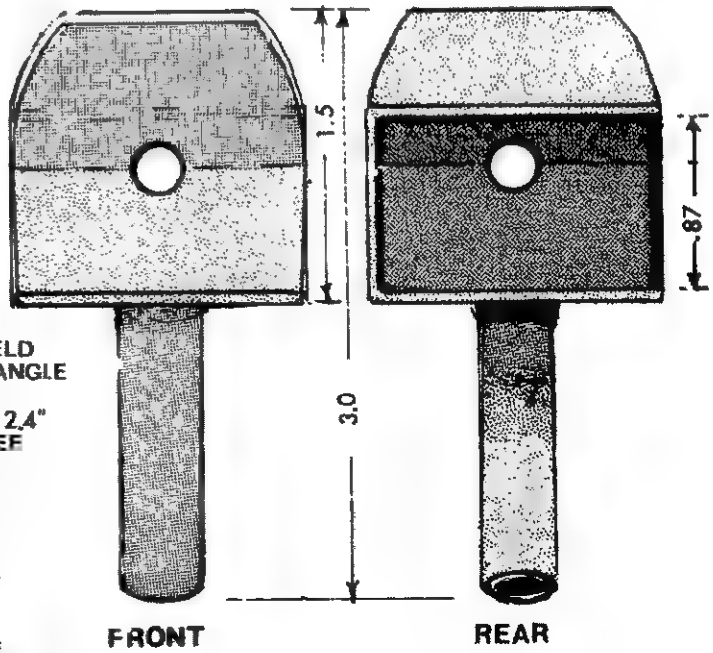

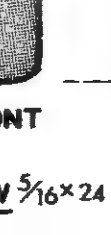

2. Pistol Grip (Figure 6)

Three different grip styles have been used on this stock since its introduction. The current grip is plastic,and may be purchased separately if desired.(fig.7) The dimensions are more suited to a full size rifle than the more compact Mini 14. The grip design included here feels more appropriate, and is closer in size to the original Ruger factory unit.This grip may also be installed on Choate conversions.

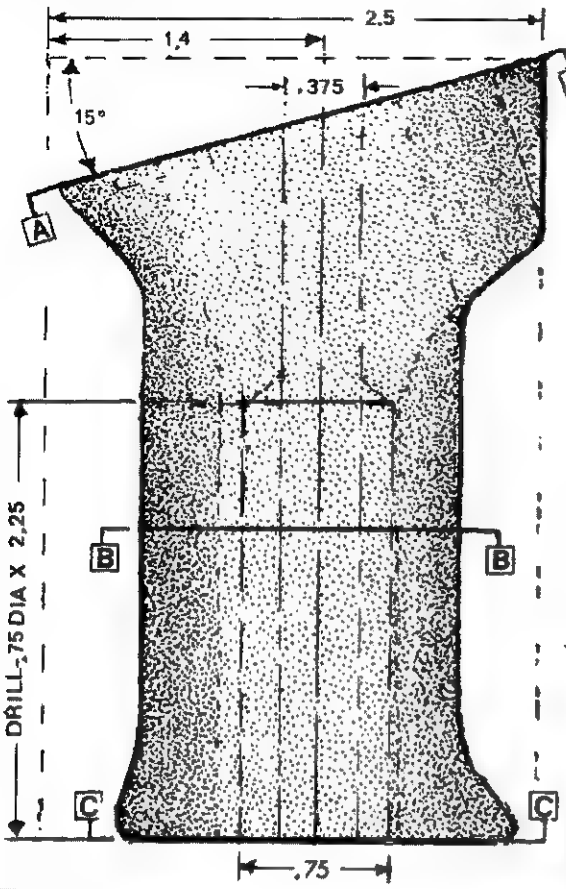

Fig.Six

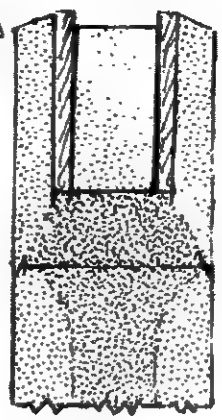

Section AA

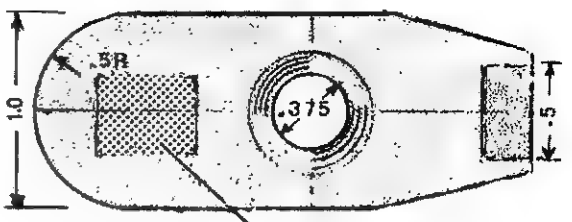

Grip Locator Recess

Section BB

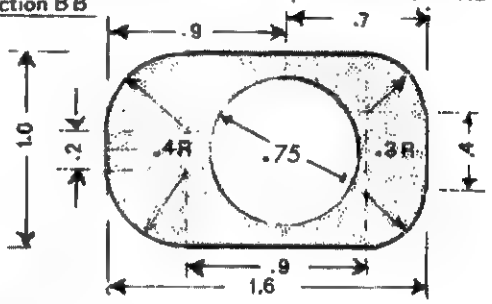

Fig.Seven

Section CC

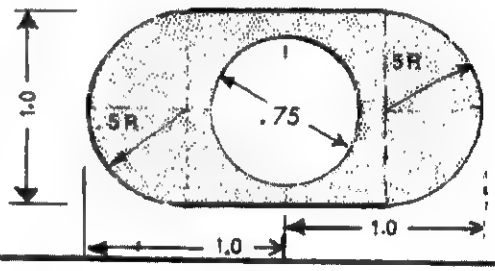

- Handguard Modification

A ventilated handguard is necessary to allow air to circulate and cool the barrel. If you don't care to purchase one of the three commercial models mentioned, the original wooden unit can be modified by drilling and notching as shown (see figure 11). Although weakened by this procedure, the handguard should still hold up to fairly heavy use. If in doubt,cover the exterior surface with a couple of layers of fiberglass cloth/resin before drilling. Additional strength may be obtained epoxying a layer of fine mesh metal screen to the inside of the handguard. This will also prevent debris from entering the vent holes and jamming the operating rod.

Fig.Eleven

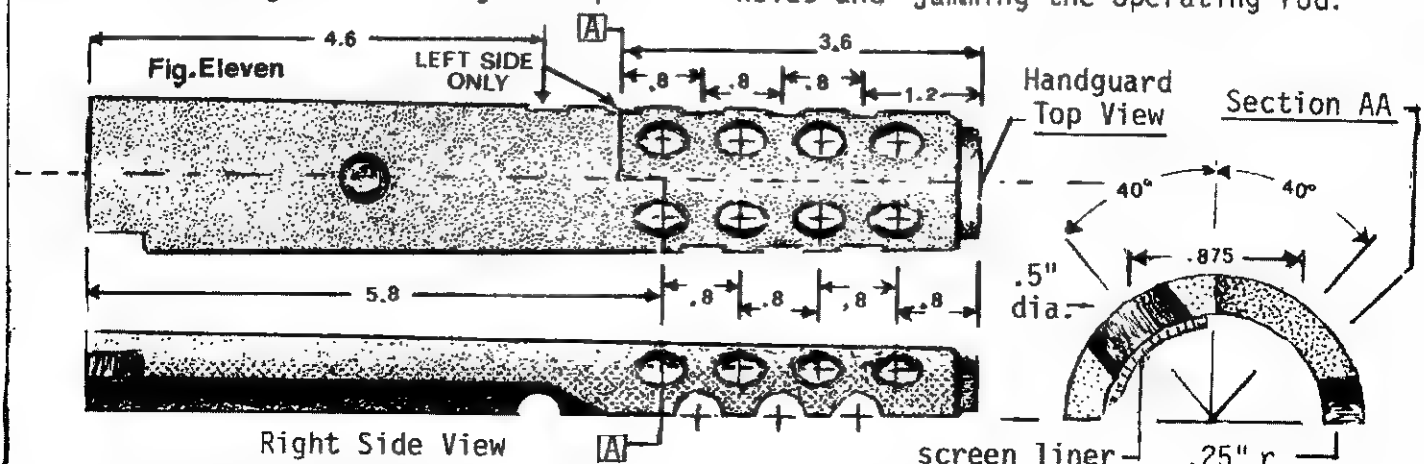

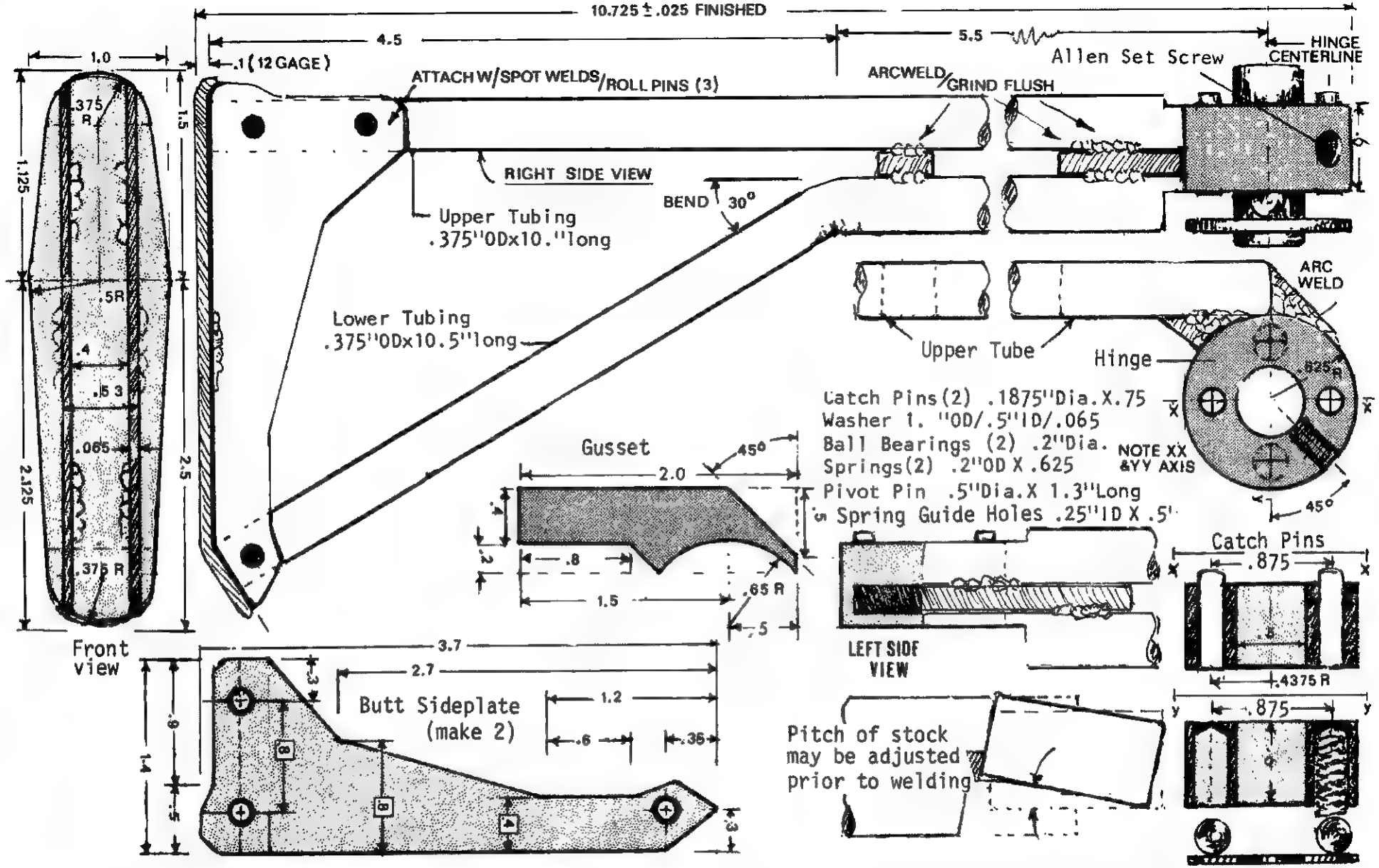

3. Folding Stock Assembly

The folding section of the Choate stock, although sturdy and mechanically excellent, is unnecessarily large and out-of-scale with the rest of the rifle. It is also uncomfortable and tends to catch on clothing and underbrush. The folding stock section outlined here is of my own design, and is derived from features found on several existing stock designs. (See Fig. 8).

This stock, or one of your own design, may be mounted on existing Choate stock conversions by cutting and welding as shown.

E - Mounting the Stock Housing on the Wooden Stock (Figure 10)

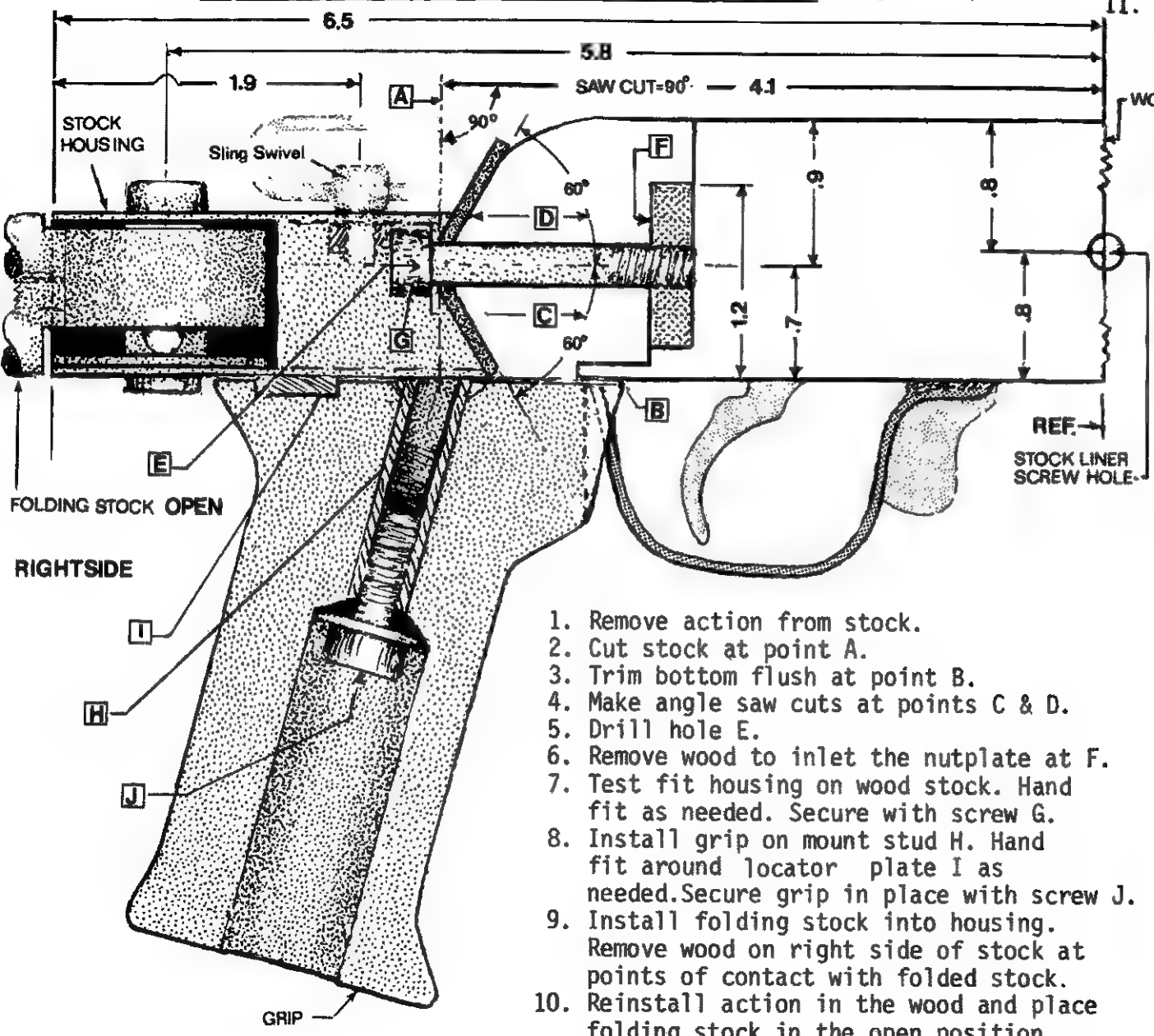

1. Remove action from stock.
2. Cut stock at point A.
3. Trim bottom flush at point B.
4. Make angle saw cuts at points C & D.
5. Drill hole E.
6. Remove wood to inlet the nutplate at F.
7. Test fit housing on wood stock. Hand fit as needed. Secure with screw G.
8. Install grip on mount stud H. Hand fit around locator plate I as needed. Secure grip in place with screw J.
9. Install folding stock into housing. Remove wood on right side of stock at points of contact with folded stock.
10. Reinstall action in the wood and place folding stock in the open position. Check vertical alignment of stock. Correct position of housing by trimming excess wood or by adding shims as needed.
11. Epoxy housing in place on wooden stock. Tighten screw G into position before the epoxy sets up.

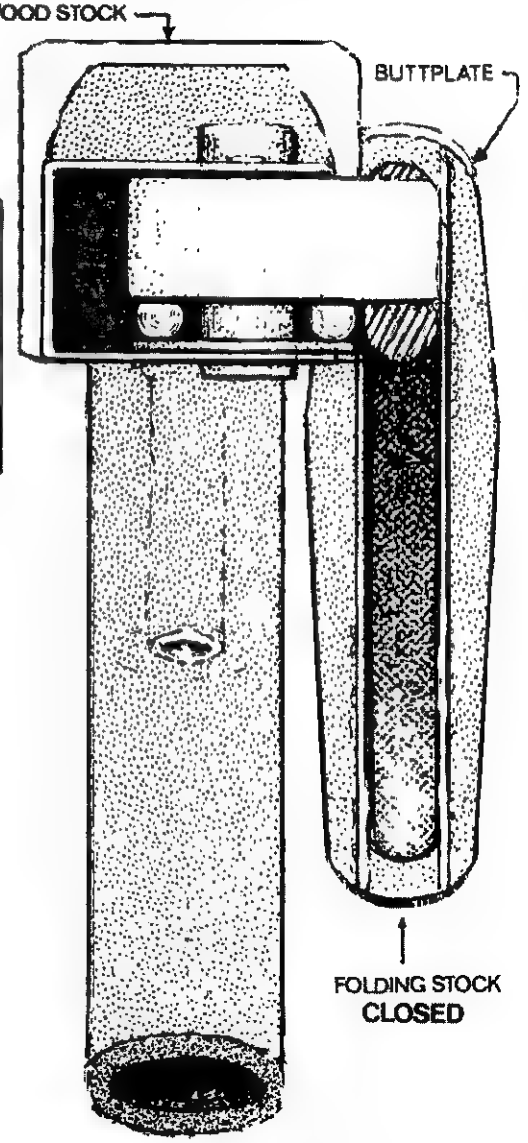

PRODUCT REVIEW — PALADIN PRESS

In spite of the current tight money situation, most weapons builders manage to slowly increase the supply of tools and raw materials in their home workshops - yet they fail to expand their technical/reference libraries at the same rate. This is unfortunate because a good library is potentially one of the most useful tools you can own.

If you've decided to expand or update your weapons library/reference material, the line of books sold by Paladin Press of Boulder Colorado is an excellent place to begin.

Paladin Press is by far the largest publisher/mailorder dealer of books on building and using weapons and related subjects. The Paladin catalog contains over 200 titles, most of which are Paladin publications. The remainder are the best of the books available from other sources in the weapons field.

The titles available from Paladin are organized into the following categories;

- Survival
- Silencers
- Military Science
- Self Defense
- Locksmithing
- Weapons
- Explosives & Demolition
- Knives and Knife Fighting
- Police Science
- Guerrilla Warfare
- Spies & Clandestine Warfare
- Sniping & Marksmanship
- Terrorism

I strongly advise you invest $1 in a catalog. Once you are on the mailing list, you automatically receive future catalogs which contain all of the new releases.

Write to:

Paladin Press
P.O.Box 1307
Boulder, CO 80306

In addition to offering the best available books on weapons, Paladin has several policies that should interest PMA readers.

1. - Fast Service

All orders are processed quickly and most titles are kept in good supply to eliminate back orders.

2. - Unconditional Guarantee

Even though the catalog gives an honest description for each title, everyone has experienced buying a book that later turned out to be less than expected. No Problem! Simply return the book within 10 days for a full refund. You only keep the books that you really want.

3. - Dealer Sales

The only requirement to purchase books at dealer rates (50% off) is to place an order with a total retail value of $100 or more. Items in catalog marked ND (No Discount) are from other publishers and not applicable to the dealer discounts. There is no need to buy several copies of the same book, orders can be made up of mixed titles. This allows you to combine your order with those of a couple of your friends, so that everyone involved gets twice the material for the same price.

You may wish to get into selling books yourself as a source of additional income. Contact Paladin and request further info on dealer orders.

4. - Purchase of Unpublished Work

If you've written a weapons oriented book, but would rather not gamble on going broke by attempting to publish and distribute it yourself, contact Paladin and see if they are interested in buying it for publication.

5. - Military Manuals

Paladin reprints a great number of US Military Field and Training Manuals. Some of these are difficult to obtain for copying purposes. If you have a rare or hard to get FM or TM, Paladin may be interested in buying it.

Recommended Titles

Numerous readers have asked that we print a list of books that they should have in their libraries. Tastes and fields of interest vary greatly, but the following are titles available from Paladin that I have found useful and would recommend to PMA readers. Listed title/author.

- Silencers, Snipers and Assassins/Truby
- How To Kill, Vols.1-5/Minnery
- The Survivor, Vols.1-4/Saxon
- The Quiet Killers/Truby
- Survival Guns/Tappan
- Personal Defense/McLoughlin & Collins
- Principles of Personal Defense/Cooper
- Home Workshop Guns, I & II/Holmes
- Exotic Weapons/Hoy
- OSS Sabotage & Demo Manual
- How Terrorists Kill/Truby
- The Poor Man's James Bond/Saxon

PRODUCT REVIEW RFP Manufacturing
CUSTOM SUPRESSOR PARTS & KITS

RFP is a relative newcomer to the field of silencer parts production. There are several other firms which make and sell similar products. It may appear that we've chosen to spotlight RFP simply because they bought an ad. (see below) Actually, we accepted the ad and wrote this review for two good reasons. First, we know and like the people involved. Secondly, and more important to PMA readers, RFP products are well made and nicely finished, yet they are priced much lower than the competition.

Two of their more interesting items are the Endcap Assemblies and the Blank Spirals. The Endcaps have a quality black anodized finish and feature a unique snap ring retainer for easy removal and replacement of worn out endwipes. These are far superior to the old MAC type units which require machining to remove the staked-in retaining washer. The Blank Spirals are exactly that. RFP has developed an ingenious machine for producing left or right twist spiral sections several feet long. These can be cut to any length desired and are available at only $10 per inch. If you've ever tried to make your own spirals from scratch, you can appreciate what a bargin these are. All you need to do is drill out the center to the desired ID and install. RFP is currently the only source I know of for obtaining spirals without having to purchase an entire suppressor parts kit.

Also worth noting, is the suppressor kit for the M-11/.380. The finished unit is larger than the factory M-11 suppressor and is said to reduce firing noise to a much lower level than the original.

CLASSIFIEDS

1/4" FUZE - MILITARY HEAVY CORE
Send Large SASE to; Tony DeVona
POB 242, Cedar Lake, IN 46303.

SIONICS INTERNAL PARTS KITS

MAC kits are supplied with a black anodized finish on all exposed parts. The endcap has a snap ring retainer to simplify endwipe replacement. Grommets and endwipes are not supplied with kits, order separate!

- **MAC KITS** ------- $ 100
  M-10/9mm or 45 (specify)
  M-11/.380 (same size as 9mm kit)
- **UZI KIT** ---------- 150
  Fits over short barrel (replaces barrel nut)
- **RUGER PISTOL KITS** ---- 100
  Slip over type (RST-4 and 6 only)
- **RUGER 10-22 KIT** ------- 100
- **AR-7 EXPLORER KIT** --- 100

All kits (except UZI) are $75 each in quantities of ten or more. Mixed orders OK

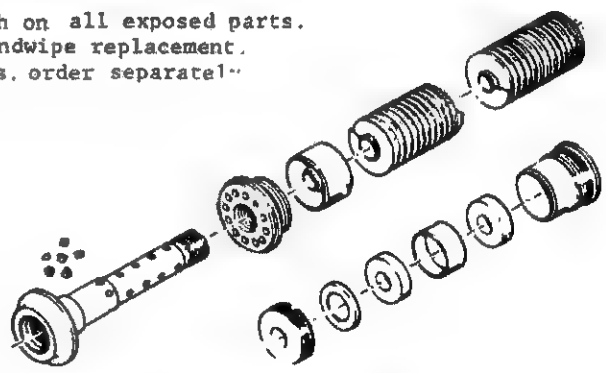

M-10 STOCK ADAPTER -- $20
Allows use of AR-15 buttstock on M-10 (No receiver modification needed.)

PARTS KITS are sold for DISPLAY or REPAIR PARTS only! We DO NOT sell TUBES! (Please don't ask for them)

MISC. SIONICS PARTS

- End Cap Assembly - $19.95
- Grommets for MAC kits/ 500 - $5.95
- End wipes for MAC kits/Set of 2/$4.00
- Blank Spirals (left or right)$10 per inch
- Catalog - $1.00 / Free with order

ORDERING INFORMATION:
Certified check or money order gives 24 hour shipping. C.O.D. is OK. POSITIVELY no personal checks.

RFP Mfg.
BOX 971
Milpitas CA 95035
or call- - - (408) 946-0677

the blowqun

BY BONNIE & CLYDE

I INTRODUCTION

The blowgun and dart specs shown in Fig.One are based on the "Aeromag Blowgun". The gun complete with six darts is available for about $15. Additional darts are available for around $3.75/per set of 6. If you wish to buy a readymade blowgun, I recommend the Aeromag over other products available. For more info contact:

Aerospace Cone Company
P.O.Box 142, Decatur,GA 30031

Fig. One

Blowgun length: 48.75"
Tube length: 48"
Tube Specs: seamless aluminum tubing, .5"OD/ .39"ID/ .055" wall thickness.
Mouthpiece specs: aluminum round stock, 1"OD X 1.5" long.
Dart Length: 5.1875"
Shaft specs: straightened music wire, .062" dia. X 5inches long.
Cone specs: machined from aluminum bar stock/finished size: .375"OD X.375"long.

The gun presented here is based on a bore of .375" or about .38 caliber. It is generally accepted that anything smaller will not be effective except at short ranges. Some examples of blowguns have bores in excess of .5", but unless you have exceptional lungs, you will find this size too hard to use.

Blowgun lengths also vary, from about 18" as used by some assassins, to over 17 ft. These monsters are used by the Jivaro indians of Ecuador. They can easily hit a hummingbird at 50 yards.

For general use, the 48" model outlined here will be sufficient, although you may wish to try the 18" extension shown in Section III for a total length of 6 ft.

II BASIC BLOWGUN CONSTRUCTION

Refer to Fig.2 for the following.

1. Tube: .5"OD aluminum tubing is available at most builder's and hardware stores. It is usually sold in six foot lengths.
   a. Cut the tubing to 48" long.
   b. Deburr all inside/outside surfaces on both ends.
2. Mouthpiece:
   a. Cut the 1"OD aluminum round stock to 1.5" long.
   b. Drill a .375"ID hole through the entire piece.
   c. Counterbore the front end of the mouthpiece to .5" dia X .75" deep.
   d. Machine or hand shape the mouthpiece to the shape shown.
   e. Apply epoxy to the outside of the tube and tap the mouthpiece into place. Use a piece of wood for a hammer to avoid marring the soft aluminum. Wipe off any excess epoxy.

Fig.2—Scale: 1.0"=.5"

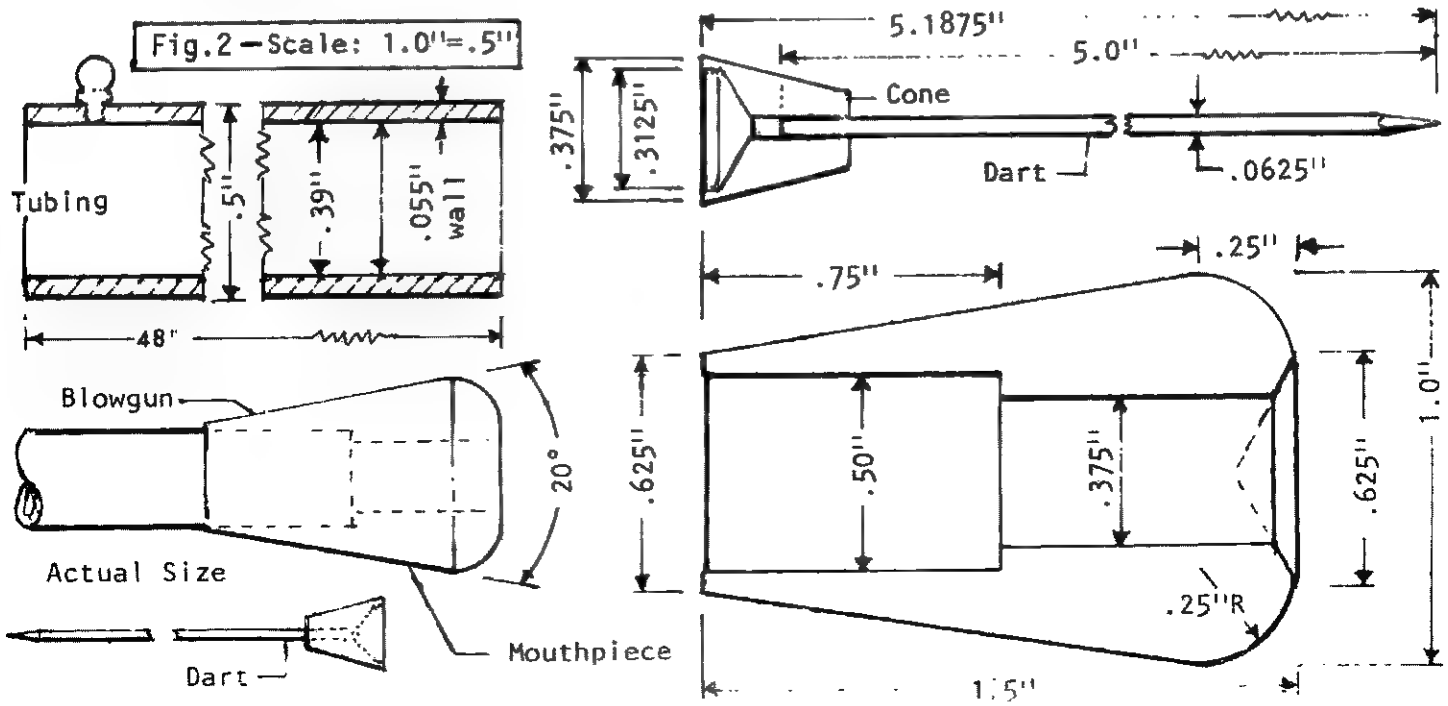

3. Front Sight: (Optional)
Drill and tap the muzzle end of the tube and install a standard shotgun bead sight. Deburr the hole inside the barrel.

4. Darts: Straightened music wire is found in most hardward stores and is also available from:
Small Parts Inc., 6901 N.E.Third Ave. Miami, FL 33138. Catalog $1
.062 dia wire is sold in two lengths:
5 pcs. @ 18"ea for 55 cents or
10 pcs. @ 36"ea for $2.20.
a. Cut the wire into 5" sections by notching with a file and then breaking with a pair of pliers. Take care not to bend the wire.
b. Deburr both ends of the wire.

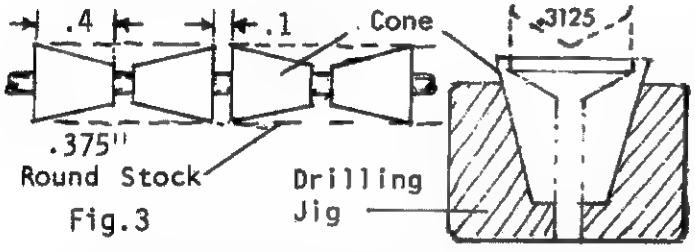

Fig.3

c. The cones are best made on a Unimat or similar type small metal lathe. Several cones can be turned at once and then cut into separate pieces.(Fig.3)
d. Place finished cones in a drilling jig on a drill press.(Fig.3) Drill through cone with a .0625" dia drill.
e. Clamp wire into a vise and drive the finished cones into place with a wooden hammer. If the cones are a loose fit, epoxy may be used.
f. Sharpen the completed dart on a grinder. Use water to cool the point, preventing loss of temper. Darts can be left dull for practice or may be ground to a needle sharp point for hunting.

III Takedown Blowgun

The Aeromag design can be modified to allow for takedown as follows.
1. Cut the tubing into three 18" pieces, (four if a 6 ft gun is desired)
2. Deburr all inside/outside surfaces.
3. Install the mouthpiece on one of the sections.
4. Construct two couplers (3 for 6 ft version) as shown in Fig.4.
5. Drive or epoxy one coupler into each remaining piece of tubing. The completed piece should be 18.75" long.
6. To assemble the blowgun, slide pieces together and tape in place. Tape may not be necessary, but it's the best way to gaurantee that the gun will not fall apart.

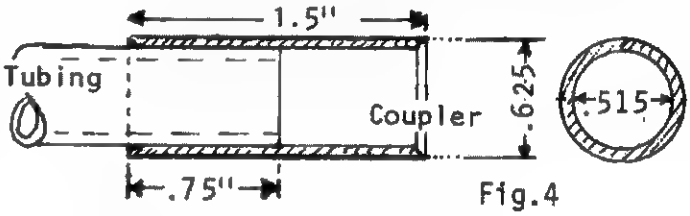

Fig.4

IV Additional Dart Info

Several alternative dart materials and designs are shown in Fig.5. The blowgun has been used by people all over the world for both hunting and fighting. Darts have been known to range from 1.5" to 22" in length. You may wish to experiment with various sizes until you find one you prefer. For additional info on blowgun darts and a good description of hunting with poison read A Sporting Chance by Daniel P. Mannix, E.P.Dutlon & Co. Publ. 1967. This book may be out of print and hard to find, but it's worth the effort to locate a copy. The book contains info on building and using a number of handmade weapons.

Fig.5

A small collapsible blowgun can be made from hobby store brass or aluminum tubing. Tubes of 10,11,&12/32" diameters are best. Cut tubes to a concealable length,say 6". Use masking tape to build up a mouthpiece on the rear tube and a shoulder on the forward end of each extention. This keeps tubes from telescoping in on themselves.

A blowgun this size can be hidden in a pocket eyeglass case. It can be extended and used while still in the case.

For darts try a variety of needles:tapestry, crewel, net repairing.All have eyes to thread stopper through.Use a portion of a cotton ball and fuzz end to secure,or use thick yarn and tie knot.Bamboo skewers work well.Split end and fuzz cotton in split,secure with drop of glue.All will fly well 3 to 8 feet,penetrate from ¼ to ½" in wood or clothing.

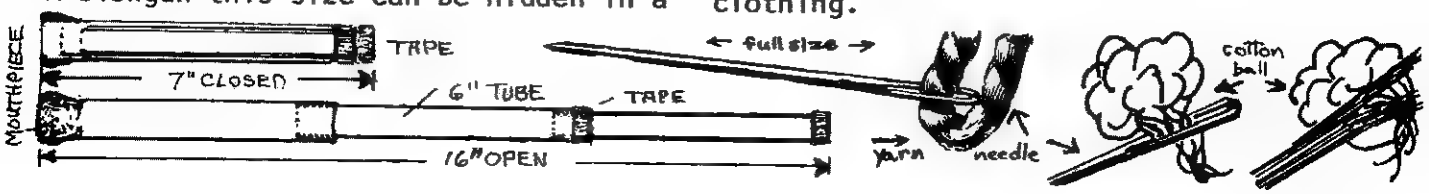

60mm Mortar
part 5 by Clyde Barrow

I Introduction

This final segment of the 60mm Mortar series will cover the following areas:
Section II Completion of the bipod and collar assemblies.
Section III M-4 Mortar sight.

If you intend to build a 60mm Mortar you should obtain a copy of the Army manual which contains complete info on setup, aiming, firing and maintenance.

US Army FM 23-85, 60mm Mortar. $5ppd. Available from: Arm & Merchant Books, 1210 J Street, Modesto, CA 95354.

This firm also carries firing tables, plotting charts and similar data related to the 60mm Mortar. Contact them for more info and prices.

Please note the two corrections marked in Figure One. The area shown is from the right side of the section on building the yoke/ PMA Vol.2 page 117. Ed.

Figure One

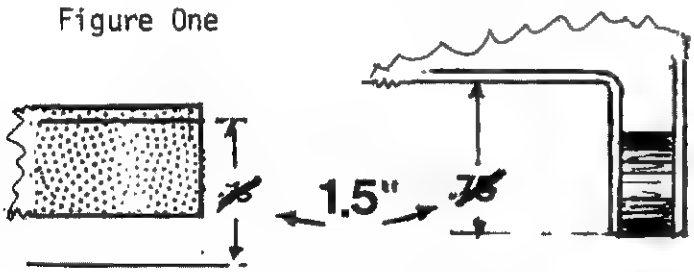

II Completion of Bipod and Collar Assemblies.

1.-Saddle Collar Latch (See Fig.2)

a. After hinging the two collar halves as outlined in Issue 3, weld one .75"x1.0" slotted tab to each half of the collar.

b. Weld two hinge tubes to the bottom edge of the lower tab.

c. Weld a third hinge tube to the bottom of the clamp bolt.

d. Assemble hinged bolt to the lower collar assembly.

e. Construct and install the "tall" nut as shown in Fig. 2.

Figure Two

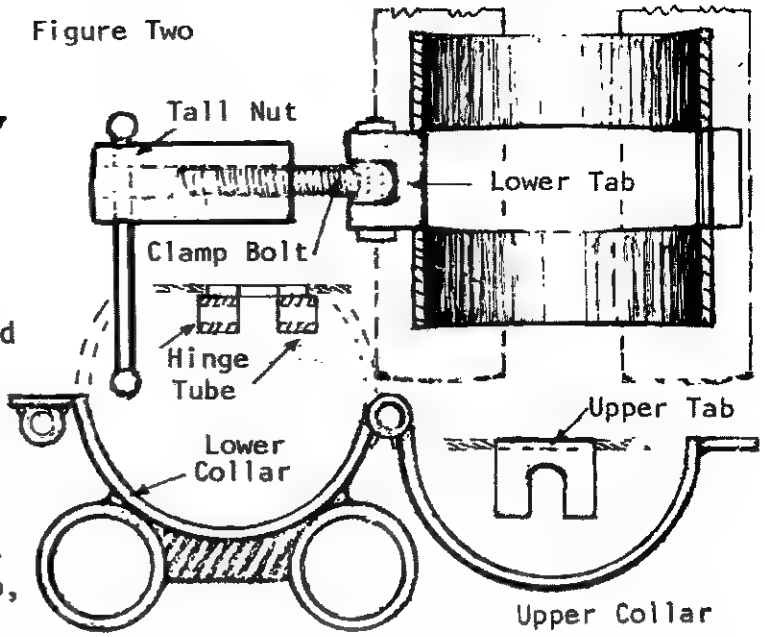

2.-Elevation Mechanism (Cont. from PMA Vol. 2/ page 118)

-Individual Parts Specs (See Fig.3)

a. Elevation Tube: 1.0"OD - .065 wall X 12" long (see Vol.2 pg.118).

b. Guide Tube: 1.25"OD - .065 wall X 11.5" long (see Vol.2 pg.118).

c. Elevation Screw: 5/8" threaded rod (5/8 NC X 11 TPI) X 12" long. Weld a 5/8" nut in place on the screw with 2" of thread exposed beyond the nut.

d. Thrust Washers (2): .65"ID/1.0"OD. Washers may be fiber or nylon, approximately .1" thick.

e. Elevation Crank: 5/8 NC threads. You may modify an existing crank or build one from scratch as shown in Fig.3. Crank can be secured with a set screw,pin or jam nut.

-Final Assembly (Fig.4)

a. Turn elevation screw into the lower end of the elevation tube.

b. Drop thrust washer into the guide tube. It should come to rest on the top of shoulder welded into the tube's bottom.

c. Align guide strip on elevation tube w/guide slot in the top bushing of the guide tube. Slide elevation tube down into the guide tube until it rests on the thrust washer.

d. Install a second thrust washer and the elevation crank on the screw protruding from the bottom of the guide tube.

e. Elevation tube should move up and down freely when crank is turned. Be sure to apply grease to all surfaces before assembly.

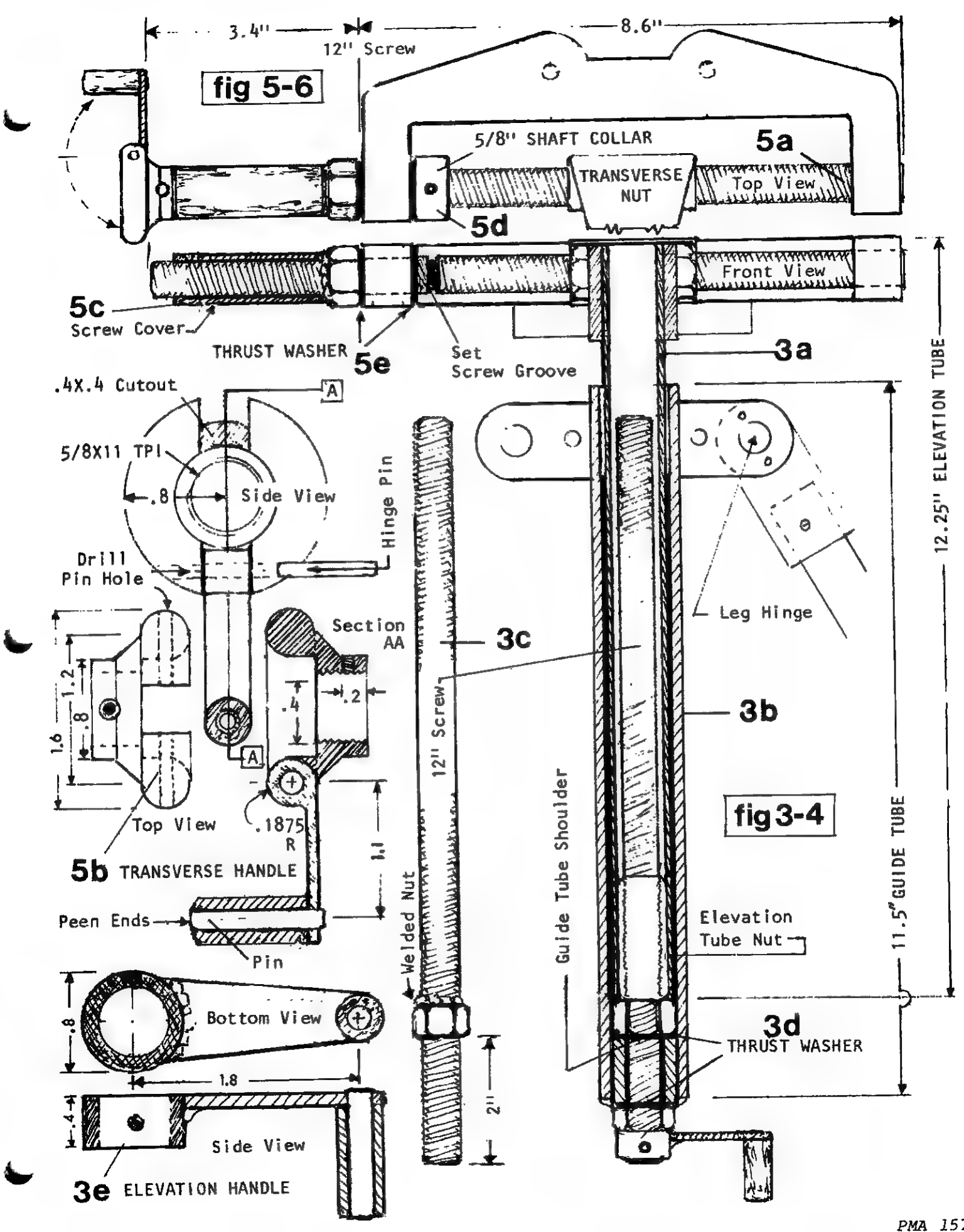
fig 5-6
3.4"
12" Screw
8.6"
5/8" SHAFT COLLAR
5a
TRANSVERSE NUT
Top View
5d
Front View
5c
Screw Cover
THRUST WASHER
5e
Set Screw Groove
3a
12.25" ELEVATION TUBE
.4X.4 Cutout
A
5/8X11 TPI
.8
Side View
Hinge Pin
Drill Pin Hole
Section AA
Leg Hinge
3c
12" Screw
3b
1.6
1.2
.8
.4
.2
A
Top View
.1875 R
1.1
5b TRANSVERSE HANDLE
Peen Ends
Pin
Welded Nut
Guide Tube Shoulder
fig 3-4
Elevation Tube Nut
11.5" GUIDE TUBE
3d
THRUST WASHER
.8
Bottom View
1.8
.4
Side View
2"
3e ELEVATION HANDLE

3.-Transverse Mechanism (See Fig.5)
-Individual Parts Specs

a. Transverse Screw: 5/8" threaded rod (5/8 NC X 11 TPI) X 12" long.

Weld a 5/8" NC nut in place on the screw with 8.6" of thread exposed. File a groove for shaft collar installation. Groove location is determined after test fitting the screw in the yoke assembly.

b. Handwheel: 5/8"NC threads.

Modify an existing handwheel or build one from scratch as shown in Fig.5.(Folding handle is optional).

c. Sleeve: 5/8"ID metal tube.

Cut to length to fit over screw between the yoke and handwheel assemblies. (Non-functional/serves as a thread cover only.)

d. Transverse Screw Retainer:

Use a commercial 5/8"ID shaft collar. Collar is secured in place w/set screw that fits into a groove cut in the transverse screw.

e. Thrust Washer (2): Same as used in Elevation Screw Assembly. (II2d)

-Final Assembly (See Fig.6)

a. Slip one thrust washer over the end of the transverse screw.

b. Insert screw through the bushing in the right leg of the yoke assembly.

c. Slip on a second thrust washer followed by the shaft collar.

d. Turn the screw into the nut on the elevation tube. Continue to turn until the tube is about centered on the screw.

e. Feed the screw into the bushing on the left leg of the yoke assembly. Continue until the outer thrust washer is flush against the outside of the yoke assembly.

f. Slide the collar into position and mark the screw for cutting the groove. When groove is cut, secure the collar in place.

Additional washers may be used to take up any side play in the finished assembly.

g. Install sleeve and handwheel on outside of screw assembly.

h. Transverse nut should move freely on screw when wheel is turned.

4.-Coarse/Fine Leveling Adjustments Fig.7

a. Leg Clamp (Coarse Adjustment).

Construct clamp from a block of aluminum as outlined in Fig.7. Finished clamp should hold firmly when tightened and should slide freely when loosened. Secure clamp to bipod leg w/same screw and "tall" nut shown in Fig.2.

b. Turnbuckle (Fine Adjustment) Fig.8

Use any commercial turnbuckle that measures about 3.5" closed and 5" when extended. Secure one end to the leg clamp and the other to the tabs on the elevation tube.

c. Turnbuckle Mount Tabs Fig.9

Cut two .75" square tabs from 12 gage steel sheet. Drill one mount hole through the center of each tab. The outer edges of the tabs can be ground to a .375" radius if desired. Weld the tabs to the elevation tube with the mount holes about 1.5" from the tube bottom. The space between the tabs should be sufficient to allow insertion of the turnbuckle eye plus two washers.

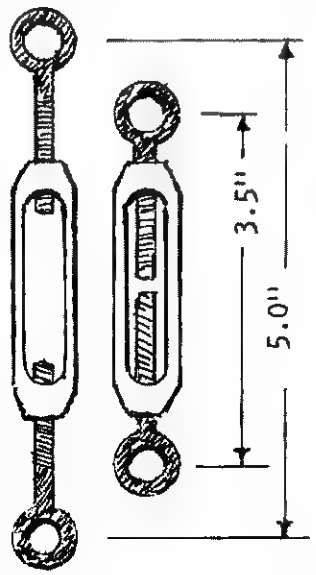

FIG 8 - TURNBUCKLE

FIG 9 - TURNBUCKLE MOUNT TAB

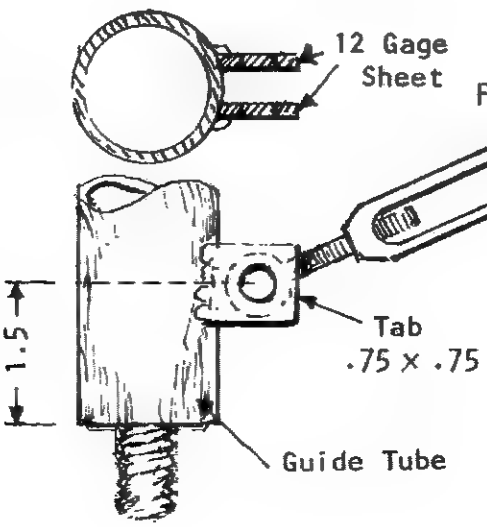

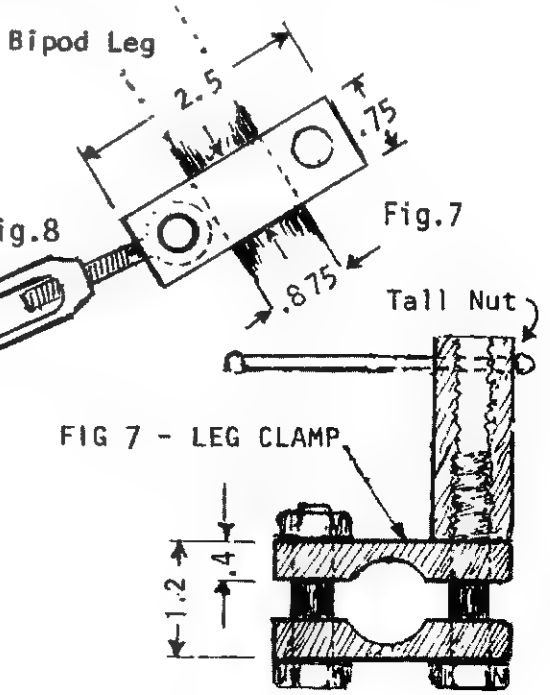

FIG 7 - LEG CLAMP

III The M-4 Mortar Sight Figure 10

The aiming/firing system for the 60mm Mortar is based on the mil. This system, described in detail in the field manual,is too lengthy to cover here except in the most general terms.

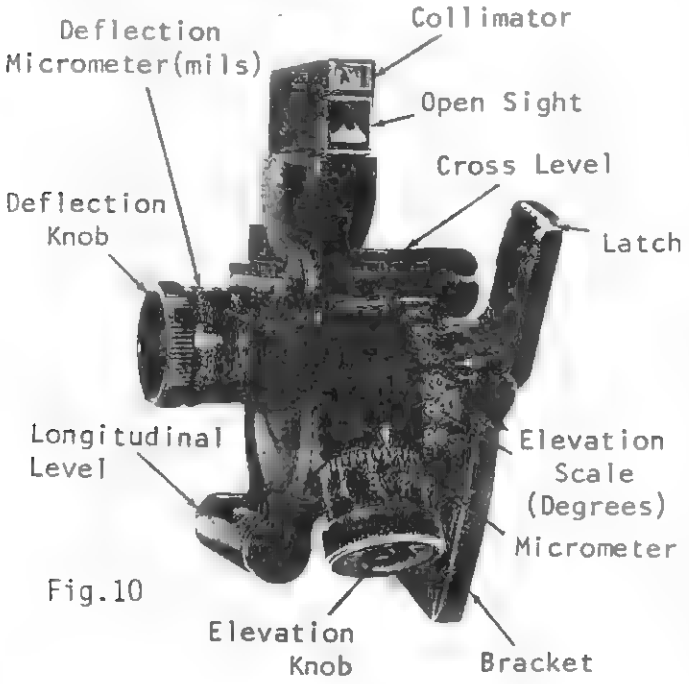

Fig.10

Horizontal sight movement is based on the circle (360°) which is divided into 6400 mils. One degree = approx 17.78 mils. The M-4 sight moves 150 mils (approx 8.4°) both right and left of center. The total horizontal movement or deflection is 300 mils (approx 16.8°). The adjustment dial has click stops at 5 mil intervals. Each click moves the sight approximately.28°.

Vertical movement of the M-4 sight is measured in degrees of elevation. The elevation dial moves the sight .25° per click, 4 clicks = 1°. Elevation adjustment ranges from 40° to 90°.

Two levels are mounted at right angles on the sight base. These aid in leveling the mortar/sight assembly when aiming.

The M-4 sight fits into a dovetail mount on the left leg of the yoke assembly.

The viewer on top of the sight may be moved up and down by hand to bring it in line with target.

You may be able to find a usable M-4 sight at a gunshow or surplus store for about $15. Several mailorder science supply houses used to carry the M-4 sight in the early 1970's, but they are apparently no longer available.

Vehicle Armor (Cont.from pp.132)

IV - Recently Developed Armor Materials

B - Flexible (Soft) Armor

DuPont Kevlar yardage can be used in a variety of vehicle armor applications.

1. Stationary Pads

These are used under door panels,seat backs, headliners and carpeting.The pads are considered permanent and are removed only for maintenance.

Construction of armor pads is fully outlined in section on Body Armor.

2. Body Cavity Filler

Kevlar remanents can be stuffed into odd shaped body recesses such as window/windshield pillars, front/rear quarter panels and under the dashboard. These pieces should be packed into the space as tightly as possible and held securely in place.Care should be taken to insure that the armor filler doesn't interfere with any mechanical functions of the vehicle.

3. Removable Pads

If the vehicle needs to be armored only at certain times,or if additional protection is needed for a vehicle that is lightly armored,removable armor pads can be used.These allow for quick installation and removal,as well as eliminating the need to remove the upholstery and carpet for installation.

Armor pads can be designed to hang over the inside of car doors,drape over seat backs or even hang from the tops of door frames to serve as removable window curtains.Pads should be enclosed in canvas or cotton duck covers to add stability and prevent dirt and abrasion damage.

To simplify armor placement, grommets or quarter-turn fasteners (female half) may be installed around the perimeter of the cover.

A large blanket type armor pad can be folded and kept in the vehicle. This may be wrapped around the target's body when protection is needed, both in the vehicle and when moving from the car to a building.

flexible Kevlar®(soft) body armor

by Bonnie & Clyde

I - Introduction

The body armor described here is constructed of DuPont Kevlar Fabric. This cloth is woven from strands of Kevlar Aramid Fiber, a material developed by DuPont as a replacement for steel wire in belted radial tires.This material is lighter than ballistic nylon and pound for pound it's several times as strong as steel. When Kevlar is used in multiple layers, it can effectively stop bullet penetration and greatly reduce internal injuries from blunt trauma. Finished armor pads are light, flexible and easily concealed.

The most widely used style of Kevlar Body Armor is the concealable police vest. This type of armor may be either a single front pad or both front and rear panels. Other styles commercially available include a T-Shirt with integral pad (see Part II),quilted ski-type jackets, military flak jackets and even Kevlar lined suits and raincoats for politicians and executives.

Fig.1 - Police Vest

All Kevlar based armor designs have the same three basic components;

1. A multi-layered armor pad of folded Kevlar fabric. Some designs use 2 or more pads for extra protection.
2. Protective cover of cotton or nylon.
3. A Carrier to hold the pad in place on the wearer's body.

II - T-Shirt Armor

The following armor design is based on the T-Shirt Armor sold by Danegeld INC. (See section III for complete info on the Danegeld line of body armor kits.)

Fig.2
T-Shirt
Armor

1. Armor Pad

A. General Info: The flexible armor pad insert is made from 8 layers of DuPont Kevlar Aramid Fabric.Two types of Kevlar cloth are appropriate for use in soft body armor.

Kevlar 29, which is used in most commercial vests,is preferred.This material is produced,tested and sold primarily as a ballistic component,although it has other applications.Kevlar 29 is difficult to obtain as yardage because DuPont apparently restricts sales to commercial armorers only.

The second choice,Kevlar 49,is similar to Kevlar 29.This material is less expensive and more readily available. (see ordering info on pp 131.) Kevlar 49 is intended for use as an industrial resin laminating component.It has lower weight to strength characteristics than Kevlar 29.Kevlar 49 is also less rigid than 29, allowing a greater possibility of blunt trauma injury from an 8 layer pad. For these two reasons, an 8 layer pad of Kevlar 49 should be supplemented with the additional 2 layers as shown in Step #6.

Except for the pale yellow color, Kevlar fabric looks,feels,and behaves like conventional white fiberglass cloth. Like fiberglass, Kevlar stretches,snags, and deforms easily. Care should be taken to keep the grain straight when cutting, folding and sewing this material.

The Kevlar is carefully folded at each step. Use clothespins or masking tape to hold in place until it can be sewn together. Sewing helps the fabric retain its shape and keep it from unraveling. Too much sewing breaks the fibers though,so use a ball pointed hand or machine needle to minimize this problem. Use tissue paper on either side of material to prevent snags when sewing by machine (Kevlar only), it can be torn away after stitching with no ill effects.

Armor Pad Folding Sequence

Figure 3

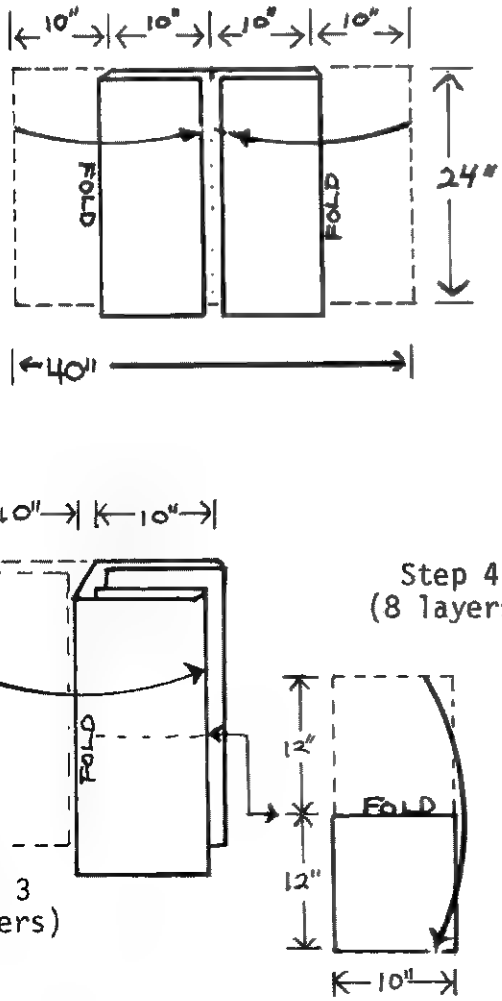

B. Construction:

To make a 10" wide x 12" high x 8 layer pad,begin with a single piece of Kevlar fabric. Take care to choose a piece without tears,snags,splices or other flaws which will weaken the fabric's strength. Armor pads made from one folded piece are both easier to make and stronger than pads composed of eight stacked single layer pieces.

Step 1 - Cut material to 24" x 40".(one layer)

Step 2 - Fold edge of each side to vertical center line.(24" x 20" x 2 layers)

Step 3 - Fold in half along vertical center line. (24" x 10" x 4 layers)

Step 4 - Fold in half along horizontal center line. (12" x 10" x 8 layers) This fold becomes the top of the pad. Place pad unit under heavy books and flatten as much as possible.

Step 5 - Sew a short seam through all 8 layers at sides and top to keep layers from shifting.(See Fig.3 for placement of tacking seams.)Make seams about 1" long.

Step 6 - If Kevlar 49 is used,cut out an additional piece of Kevlar 10" x 24" and fold it in half over the top of the finished 8 layer pad. Sew through all 10 layers. Make these tacking stitches along sides, about 1" above the ones in the inner pad. Do not overlap these stitches.

Step 7 - Smooth out and flatten completed pad under heavy books again. It is now ready for insertion in a protective cover.

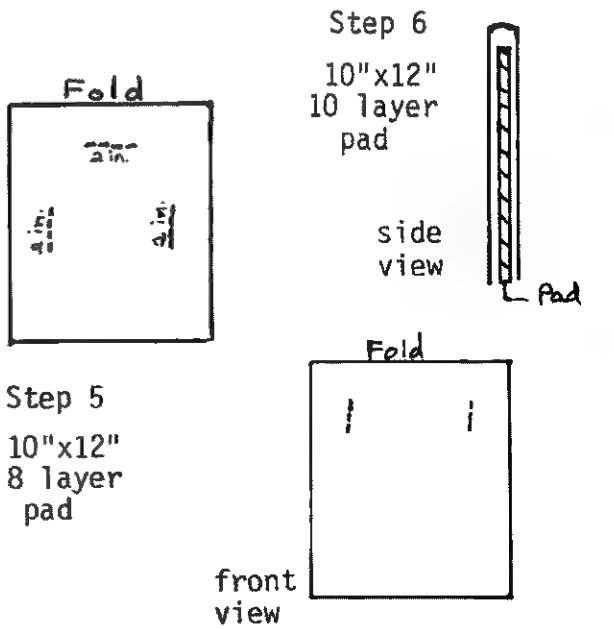

2. Protective Cover

A. General Info: The Kevlar pad is sewn into a cover which keeps it clean, prevents the cut edges from unraveling, and minimizes cloth distortion from handling.The cover is considered semi-permanent, removed only for replacement and laundering. Color should be close to color of carrier. NOTE: Both cover and carrier fabrics should be laundered so they are pre-shrunk before cutting.Do not launder the Kevlar!

B. Material: The cover can be made from any fine weave cotton/polyester, or the new breathable fabric called Gortex®, which allows water vapor,"perspiration", to pass through the material fibers without retaining moisture itself.Dimensions of the cover are greater than the pad to allow for flex and expansion.The finished pad/cover unit should be about 11"x13",or 1/2" wider on each side of pad.The seams can be made by machine or hand.The final seam may be done as a chain stitch to allow for easier removal of pad when cleaning cover.

C. Construction: Material size-12"x26"

Step 1 - Fold to size 12"x13". Sew side seams 1/2" from fold to end. Fold becomes bottom of cover. Carefully insert pad into cover, folded end of pad goes in last.

Step 2 - Sew open end of 1/2" from edge, with chain stitch or long basting stitch. Pad should be loose in cover so it will flex when on. DO NOT SEW THROUGH KEVLAR!

Step 3 - Trim the three sewn edges to within 1/4" of the stitching line.

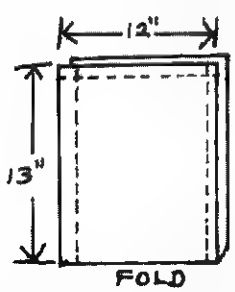

Fig.4

Protective Cover

Sew side seams.
Insert pad.
Sew end seam.

3. T-Shirt Carrier

A. General Info: This is the simplest of all carriers to make. The entire assembly consists of a heavy duty cotton T-Shirt modified to hold ballistic pads,by sewing one (front) or two (both front and rear) pockets on the inside surface.The pad(s) are slipped into the pockets through an opening left in the pocket bottom.Several carriers should be made so they can be cleaned frequently.

B. Materials: 2-Heavy Cotton T-Shirts

Use new T-Shirts,same color. Buy for a loose fit, not your regular size.One of the t-shirts is used for cutting out inside pocket liner, the other shirt is the carrier proper. Sew with strong thread like Dual Duty Plus,found in fabric shops.

Fig.5 Carrier

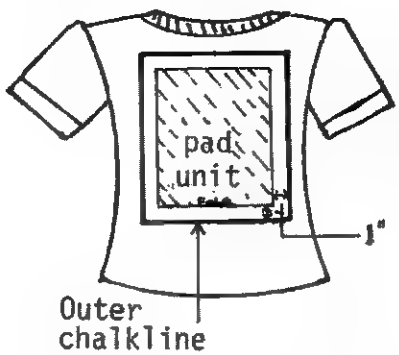

Step 2

Pin pad in place.Trace. Draw outer chalkline for liner pattern. Remove

Front (inside out)

Step 3

Trace outer chalkline. Make pattern,cut liner from 2nd shirt.

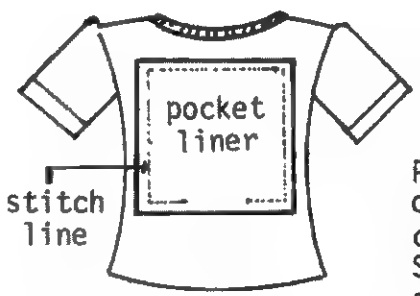

Step 4

Pin liner to carrier over chalkline. Sew ½" from edge as shown.

C. Construction: Final construction of carrier will proceed faster if you can enlist the help of a buddy at this point. However, a full length mirror will do if no one is available to help with the fitting. Pocket liner is cut after fitting is completed.

Step 1 - Put on T-Shirt inside out,do not tuck in pants yet. Pad with cover is positioned over chest area you wish to protect.Folded edge of pad is down.

Step 2 - Mold pad to body shape(pad takes a curve) and pin to shirt around edges of cover. Bottom of pad should just touch the top of your belt when seated.When you have location correct, trace position of pad directly onto the t-shirt with chalk or soft pencil.Marks are removable and

will wash off later.While still on,mark a 2nd line 1" all around panel.This will become the positioning line for your inner pocket.The 1"width allows 1/2" of room around panel at stitching line.To check for correct positioning,unpin pad and slip under shirt to position marked. Pin corners,sides and recheck for sitting comfort.Make any pocket liner corrections now with chalk.

Step 3 - Unpin pad and remove shirt carefully. Lay flat,shirt will relax and return to normal size.Make a tracing of the outer line without stretching fabric.Use this shape as pocket liner pattern.Pin in place on other shirt and cut out one.Pin or tape pocket liner to shirt matching chalk line.

Step 4 - Sewing 1/2" from edge of pocket, sew liner and pocket together along top and sides. At bottom, sew 3" from edges to center only. The center of the bottom edge is left open permanently, so pad unit can be easily inserted and removed from the carrier. When stitching the corners, you can reinforce seam by sewing over seam tape if you wish.

Step 5 - Use a stitch with "give"or stretch in it such as the chain stitch, so thread will expand with the fabric and not break.

Step 6 - Try on shirt, check for fit, then insert armor pad unit with the folded edge down.Smooth out pad into the pocket, flatten any wrinkles. Make sure bottom corners of the liner catch the pad. Tuck shirt into pants. Excess pocket seam allowance can be trimmed after garment is completed from 1/2" to 1/4" to reduce bulk.

Step 7 - Make back pocket (if needed)by repeating steps 1-6.

Step 8 - For maximum concealment,wear T-Shirt armor under loose fitting shirt or jacket.

Step 9 - For added protection, 2 or more pads may be inserted in the pocket.

Note: Carriers should be washed frequently. Protective covers should be sponged off and only removed to wash if cover is heavily soiled.The Kevlar armor pad should NEVER BE LAUNDERED as the process will damage the pad.Since pads will get wet from sweat or rain (damp really) air dry thoroughly before returning to use. Water reduces Kevlar's strength!

III - Armor Kits and Info

A. Kits: One source for armor kits is Danegeld Inc. Box 54673, Atlanta GA 30308. Send them $1 for complete info. Danegeld sells Kevlar yardage, kits with patterns and instructions for several styles of armor, and ready made T-Shirt armor similar to the design shown in section II. They also sell the armor steel inserts mentioned in section V.

Danegeld Armor® and armor kits

B. Technical Info: An excellent source of Kevlar technical information is a 1976 Government sponsored report on Lightweight Body Armor. The 113 page report contains many charts and illustrations. It should answer any questions you have on Kevlar armor. Request:

Body Armor for Law Enforcement Officers Stock # 027-000-00409-1. May 1976. Price $1.95. Order from: The Superintendent of Documents, U.S.Government Printing Office, Washington, D.C. - 20402.

IV - Protection Levels of Kevlar Armor

The following is presented as a rough comparison only. Never trust any armor pad until you have personally fired at a test panel. Panels should be comprised of the same type and number of layers of material as the finished armor pad.

A single 8 to 10 layer Kevlar pad should stop the following rounds when fired from standard handguns.

22LRHV, 25 auto, 32 auto, 38 spec and 45 ACP.

Two (2) 8 to 10 layer Kevlar pads should stop the following rounds when fired from standard handguns.

9mmPara, 22 mag, 357 mag and 44 mag.

Note: All ammos listed are standard production lead core bullets. Protection from AP (armor piercing)rounds require the metal inserts used in section V.

V - Special Purpose Armor

10"x12" metal inserts of hardened steel plate can be inserted in front of the standard armor pad to give protection from shotgun slugs, AP pistol ammo, standard pistol ammo fired from SMG's and some lead core rifle bullets. The front surface of the plate is covered with Kevlar and bonding resin. This treatment helps to minimize bullet fragment "splash" and ricochet.

Flexible Kevlar body armor, even with dual pads and metal inserts, will not stop some high power rifle bullets. The three most difficult rounds to stop are tungsten cored 308 NATO and 223 NATO AP and the 7.62 Soviet AP Incendiary.

These three rounds can be stopped only by Second Chance Hard Corps or comparable special purpose combat armor,and even then there is a chance of penetration.

Remember: All armor is bullet resistant, but there is no such thing as a bullet proof vest.

Fig.7 HARDCORPS
SECOND CHANCE BODY ARMOR

It is interesting to note that body armor design has come full circle. Compare current Kevlar/metal plate armor with its 19th Century felt and metal counterpart.(See "The Same Thing Over Again" - 1894 reprinted in PMA Vol.1 page 13.)

Bonnie Sez:

Our articles on building weapons occasionally call for surplus military parts to be used.We use them to save you time & money,keeping project costs low. Some parts are a major component,as in the 60mm Practice Mortar Round (pp22)or the M-31 Practice Rifle Grenades used in the Armbrust article (pp142).If you plan to build any of these projects in the future you should buy the parts now because they may disappear from the surplus marketplace at any time, never to be seen again. Even if you don't build a project,these parts are good investments and can always be used as trading stock in the future.

When ordering items mentioned or advertised in PMA, please write for current prices/info before sending money.Companies come and go rapidly these days as in the case of Special Parts Limited of Atlanta, (a PMA advertiser).Check the Shotgun News for new sources of companies to fill your needs, or MX Military Exchange P.O.Box 3,Torrington,CT 06790/$7.50-yr.

- - - - CORRECTIONS - - - - - -

Page 21, VOID ad/P.O.Box 656 (new#).

Page 131 line 28/Kevlar 29 not 49.

INDEX – Volume Two

Aluminum Casting....69
Ammo, SMG....55
Anti-Terrorist Grenades....19
AR-7, Night Scope....47
Scope Mount....3
Silencer....17
AR-15 Silencer....106
AR-180 Silencer....106
ARMBRUST AntiTank Weapon....136
Armor, Body....160
Flexible....129
Rigid....129
Transparent....129
Vehicle....126
Armored Car....81
Arrow Launched Grenade....77
ATLANTA CUTLERY....76

Barrel, Mortar....78
Baseplate, Mortar....114
Bipod, Mortar....114
Blasting Cap, Electric....42
Blowgun, Darts....154
Collapsible....155
Body Armor....160
BROOKSTONE CO....13
B-SQUARE CO....13
Bushing, Silencer....110

Cannons....13
Casting, Aluminum....68
with Foam Patterns....120
Mortar Shells....58
Collar, Mortar....114
Commando Carbine, Part 1....8
Part 2....86
Conversion Chart, inches to mm....7
Countermass, ARMBRUST....145
Crucible, casting....74

Dart, Blowgun....155
De Lisle Carbine....8
Patents....62
De Lisle, William Godfrey....8
Detonator, Mortar....62

Electric, Blasting Caps....42
Rifle....75
Endcap, Silencer....111
Endwipe, Silencer....35
Encapsulator....112
Enfield Carbine....86

Fixtures, Machining....84
Flashpowder Update....18
Fly Press....94
Foam Casting Patterns....120
Forging 81mm Mortar Shells....26
Folding Stock, Mini-14....146
Foundry Supplies....74
Frame Plans, SMG....21
Fuze, 60mm Mortar....24, 66

Gas Mask Drill....121
Goggles, Night Vision....52
Grenades, Anti-Terrorist....19
Arrow Launched....77
Improvised Hand....14
M-31 Rifle....142
Riot....81
Gun Parts, SMG....46
Gun Turret, Armored Car....81

Hand Grenade (see Grenade)
Hand Guard, Mini-14....149
Hydraulic Arbor Press....29

Improvised, Hand Grenade....14
Landmine....104
Infra Red Scope....48
Ingram, Gordon....32
SMG Parts....6
Introduction to Volume 2....1

Jigs, machining....84

Kevlar, DuPont....131
Knife from File....3

Landmine....104
Lathe Tips....84
Lexan Armor....131
Long Barreled AR-7 Silencer....17

M-10/M-11, Suppressor....32
Frame Plans Source....21
M-16 Rifle Silencer....106
M-31 Rifle Grenade....142
MAC SMG Parts....6
Metal Casting (see casting)
Metal Spinning....84
Metal Lube....55
Mini-14, Folding Stock....146
Hand Guard....149
Silencer....106
Missile Update....30
Money Car....81
Mortar, 60 mm Part 1....22
Part 2....56
Part 3....78
Part 4....114
Part 5....156
Mortar Shells, Forging, 81mm....26
Muzzle Threading....106

NAVY ARMS CO....13
Night Scope, AR-7....47
Night Viewing Devices....48
Night Vision, Goggles....52
Device....103
Noise Suppressor....107

Objective Lens....49
Oscillator....49

PALADIN PRESS....152
Passive Night Scope....54
Patterns, Foam Casting....120
Pistol Grip, Mini-14....149
Piston, ARMBRUST....144
POPULAR MACHINING....6
Potassium Chlorate....18
Powder, Flash....18
Practice Rounds, Mortar....22
Press, Arbor....29
Fly....94
Hydraulic....29
Push Dagger....4

Qwik Point Scope....47

Remote Firing Device....75
Replica Cannons....13
RFP MFG. CO....153
Rifle, Electric....75
Grenade M-31....142
Silencer .223 cal....106
Riot Grenades....19
Ruger Mini-14 Folding Stock....146

Sand Casting....120
Scope Mount, AR-7....3
Shell Body, Mortar....57
Shell Forging, Mortar....26
Sight, M-4 Mortar....159
Silencer, AR-7 Rifle....17
Kits....153
Patent....86
Parts....6
Rifle....106
SMG....32
Soft Body Armor....160
Sound Suppressor Kits....125
SOUTHBEND REPLICAS....13
Special SMG Ammo....55
Special Tools, Jigs & Fixtures....84
Spirals, Silencers....37
Starlight Scope....49
Stock, Mini-14 Folding....150
Submachine Gun Parts....6
Suppressor, M-10/M-11 SMG....32
.223 cal rifle....106

Tapping Fixture....85
Test Firing Bench....138
Thread Cutting....84
Tools, Special Machine....84
Toxins....43
T-Shirt Armor....161
Turnbuckle, Mortar....158
Turret, Gun....81

Update, Anti-Terrorist Grenades....19
Flashpowder....18
Guided Missile....30
Knife from File....3

Vehicle Armor....126
Viewing Devices, Night....48
Villa, Pancho (poster)....80
Vision, Night....52

Werbell, Mitchell....32
Working Aluminum....68
WAG-AERO INC....13

This is your last issue of The Poor Man's Armorer Vol.2 Volume Two Issue 4 completes this volume year, and contains an index for the entire Volume Two PMA. Volume Three may be subscribed to now. We will allow past readers to re-subscribe at the reduced rate below. To re-subscribe, please attach the mailing label from this last issue to the space provided below. Volume Three will be about 100 pages in length, roughly 25 pages per issue; this will enable us to write and print each issue faster so we can mail them out to readers in less time. The information will be on the same interesting subjects we have been covering and the advertising will be kept to next to nothing as before. We take longer than other magazines, as you know, so please don't be alarmed if we are late. We guarantee you will receive all the issues promised. A re-subscription to a complete Volume Three/4 issues subscription will entitle you to all 4 issues mailed as they are completed.

We want to thank you for supporting PMA in the past and hope to be able to bring our unique information to you in the future. PMA is not available on newsstands, your only source is through direct ordering from PMA. Single issues will continue to cost more than if purchased as a complete subscription, and re-newals will benefit by the special Vol.3 reduction offered with this letter. So if you want to resubscribe to The Poor Man's Armorer, please send in your mailing label from this last issue along with your payment today. Many thanks for reading PMA.

Bonnie & Clyde

Vol.3 to begin late 1982

Volume Three PMA/4 issues

Attach label here

$18.00___ renew my subscription please/USA

$17.00___ PMA BOUND VOLUME ONE,PPD

*$10.00___ M10/M11 Frame Plans by The Void. PMA Special Sale/Reg. $20

Total___ Paid/ Check/ Money Order/ Cash